Coster Water

4-SELECT
BULK WATER VENDING MACHINE
MODEL BWD-100
MODEL BWV-100
(VMC)

OPERATOR'S & PARTS MANUAL

DO NOT USE OR OPERATE THIS EQUIPMENT UNTIL THIS MANUAL
HAS BEEN READ AND THOROUGHLY UNDERSTOOD

PART NUMBER 62502155 Rev. E

TABLE OF CONTENTS

TO THE PURCHASER 2-3
SAFETY 4-7
Instructions 5-7
Decal Location 5-7
Safety Features 7
TECHNICAL SPECIFICATIONS 8
GENERAL INFORMATION 9
INSTALLATION AND SETUP 10-11
DISPENSING / VENDING WATER 12-13
CALIBRATION, VOLUME 14-15
GENERAL MAINTENANCE 16-20
Filter Maintenance 17
Solenoid Valve 17
Measuring TDS 17
U V Light Maintenance 18
ELECTRICAL SECTION (Wiring Diagrams) 21-25
CLEANING-SANITIZATION 26-27
COIN MECHANISM 28-31
TROUBLE SHOOTING 32-36
SERVICE PARTS/RECOMMENDED SPARE PARTS 37-52
LOG SHEET 53
WARRANTY 55

TO THE PURCHASER

This product is designed and manufactured to give years of dependable service when properly maintained and used for the purpose for which it was intended. Never allow anyone to operate this equipment until they fully understand the complete contents of this manual. For owners who do not operate this equipment, it is their responsibility to ensure that the operator has been properly instructed and is fully aware of the contents of this manual. The owner is also responsible to ensure that the operator is physically and mentally capable of operating this equipment. Information contained in this manual is important in the safe handling of this equipment, and also achieving an efficient operation. If there are any questions about information in this manual, it is important to contact your dealer for clarification.

This is the safety alert symbol, it is used to alert the operator to instructions concerning the personal safety and risk factor of this equipment. Always observe and heed these very important instructions to promote a safe operation with good preventive maintenance habits.

<u>Always obtain original equipment service parts from Coster Engineering</u>. Never accept any type of substitute items, as this could affect the equipment performance.

A registration card is to be filled out by your dealer with your name and address and promptly returned to the factory. The form provides a ready reference to help in answering questions that you may have at a later date. You will need to furnish the same information to your dealer when obtaining service parts. This equipment is warranted as STATED ON REAR COVER OF THIS BOOK.

We urge you to make certain that your completed registration card has been sent in so that you will receive maximum service benefits. This form does not put you on any mailing list nor is the information on the card available to anyone else.

The location of the identification number plate on this equipment is as shown.

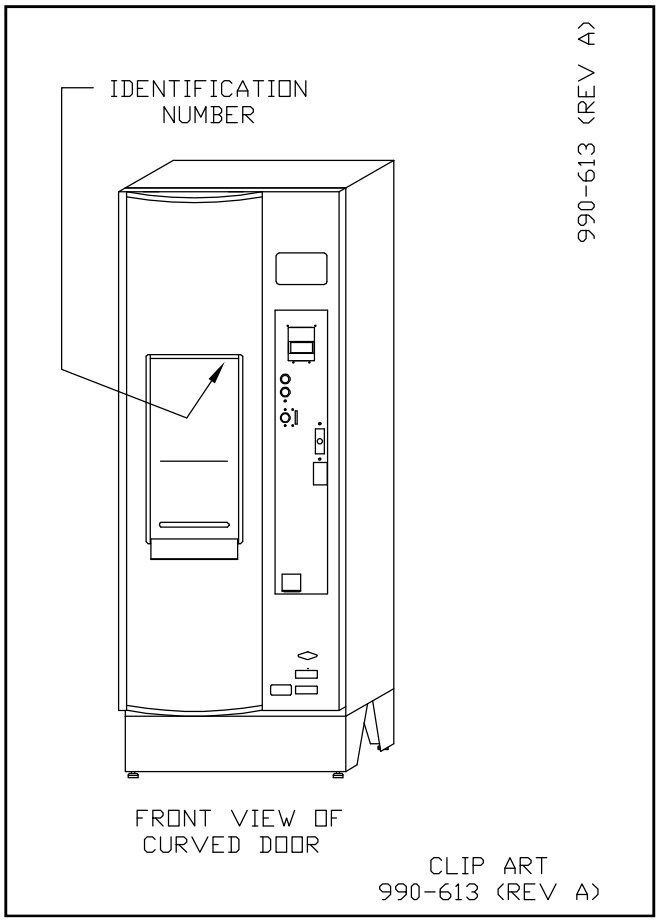

Please fill in the following information for your records:

DATE OF PURCHASE _____

OWNER'S NAME _____

DEALER'S NAME _____

IDENTIFICATION NUMBER _____

IMPORTANT: Never operate this machine until the user fully understands the complete contents of the owners instruction manual. For owners who do not operate this equipment, it is their responsibility that the user has been properly instructed and fully aware

of the manual contents. This is important in the safe handling and in obtaining an efficient operation of the machine.

Please retain this manual for future reference.

Please read this manual in its entirety before using this machine.

SERVICE INFORMATION

A label listing a local and/or toll free phone number for service or refund must be affixed to the unit. The label supplied by the owner/operator, must be in a location visible to customers; and comply with all federal, state and local regulations.

DISCLAIMER

The information contained in this document is subject to change without notice.

Coster Engineering shall not be liable for technical or editorial omissions made herein; nor for incidental or consequential damages resulting from the furnishing, performance, or use of this material.

SAFETY

TAKE NOTE! THIS SAFETY ALERT SYMBOL FOUND THROUGHOUT THIS MANUAL IS USED TO CALL YOUR ATTENTION TO INSTRUCTIONS INVOLVING YOUR PERSONAL SAFETY AND THE SAFETY OF OTHERS. FAILURE TO FOLLOW THESE INSTRUCTIONS CAN RESULT IN INJURY OR DEATH.

This symbol means ATTENTION: BECOME ALERT, YOUR SAFETY AND OTHERS IS INVOLVED.

SAFETY SIGNAL WORDS

DANGER: Indicates an imminently hazardous situation that, if not avoided, will result in death or serious injury. This signal word is to be limited to the most extreme situations typically for machine components which, for functional purposes, cannot be guarded.

WARNING: Indicates a potentially hazardous situation that, if not avoided, could result in death or serious injury, and includes hazards that are exposed when guards are removed. It may also be used to alert against unsafe practices.

CAUTION: Indicates a potentially hazardous situation that, if not avoided, may result in minor or moderate injury. It may also be used to alert against unsafe practices.

WARNING: Read and understand operator's manual prior to making any repair, adjustments, or performing any maintenance on this machine.

WARNING: Install and operate this machine only in accordance with all applicable labeling, licensing, testing and inspection, installation, electrical, plumbing, heath and safety, food water and vending machine codes.

WARNING: Never allow unauthorized or improperly supervised personnel to operate or service this machine. They must be responsible, properly trained and qualified.

WARNING: Unplug this machine prior to making any repairs. Failure to take proper precautions may result in electrical shock and death.

WARNING: Do not make any alteration or modification in the wiring or plumbing of this machine. Such alterations can result in damage to your machine, and/or cause injury, illness, or death to maintenance personnel, operators, and users of this machine.

WARNING: Use only sanitary FDA approved piping and filters in this machine. Failure to do so may result in illness, injury, or death to users of this machine.

WARNING: Flush system before use to remove all chemicals present.

The preservative, sodium bisulfite (SBS), is used to prevent microbiological growth during storage and shipment. Some individuals may experience a severe allergic reaction if machine is not flushed before start up.

WARNING: Do not look directly into the ultraviolet light or eye damage may result. Always wear UV safety goggles and cover all exposed skin when securing UV bulb.

WARNING: This machine must be connected to an inspected, approved, potable water system only containing 500 parts per million (PPM) of total dissolved solids (TDS) or less.

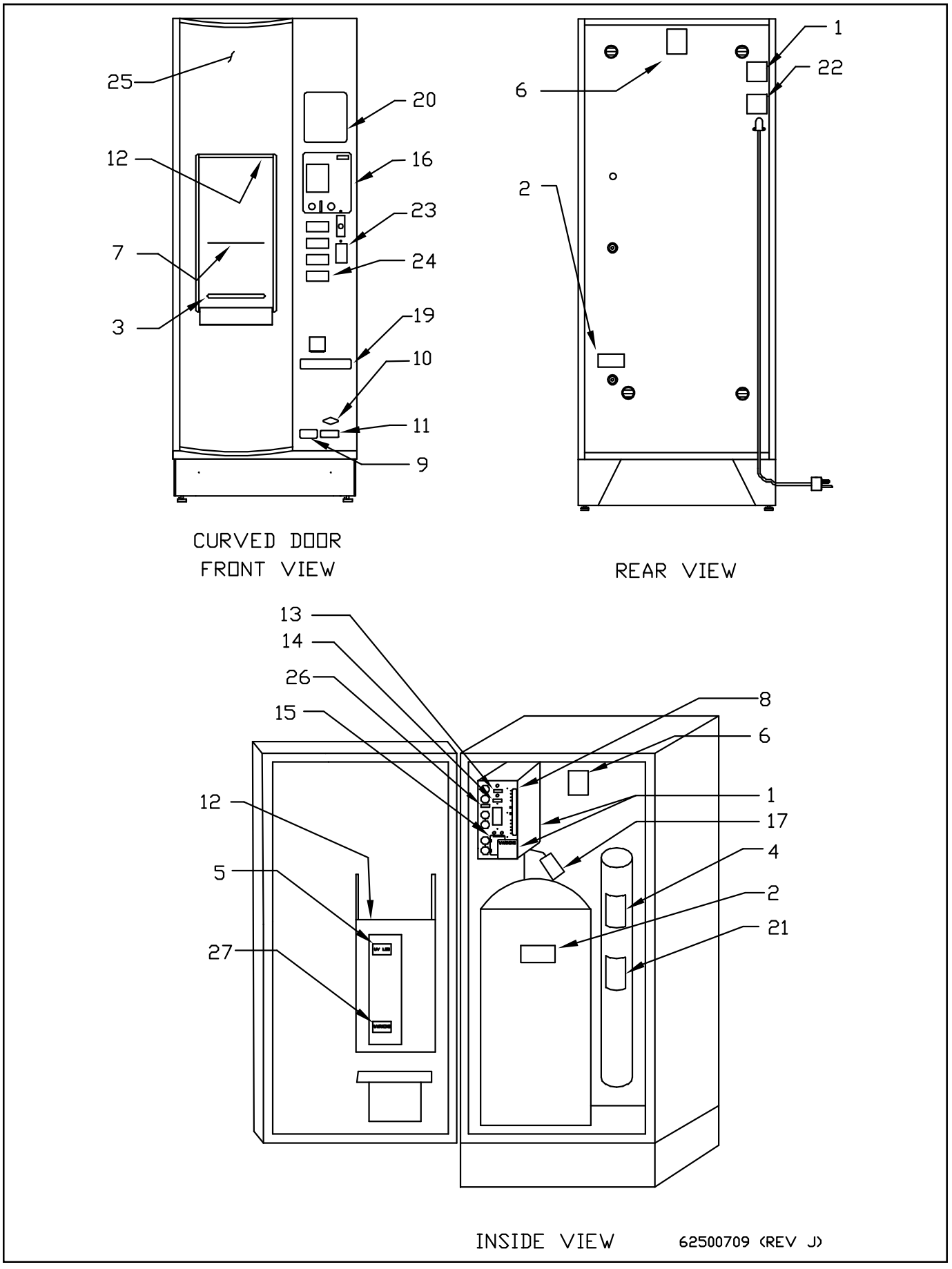
25
12
7
3
20
16
23
24
19
10
11
9
CURVED DOOR
FRONT VIEW
1
22
6
2
REAR VIEW
13
14
26
15
8
6
12
1
17
5
4
2
27
21
INSIDE VIEW
62500709 (REV J)

FIGURE 1

Decal Locations



1. Decal 62502954 located on inside and on rear (Figure 1).

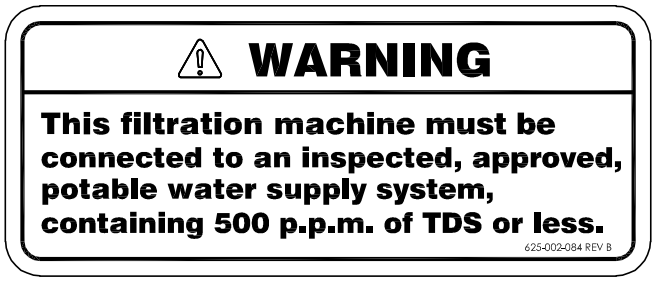

2. Decal 625-002-084 located on inside and on rear (Figure 1).



3. 62501730 On dispenser door.

4. N/A

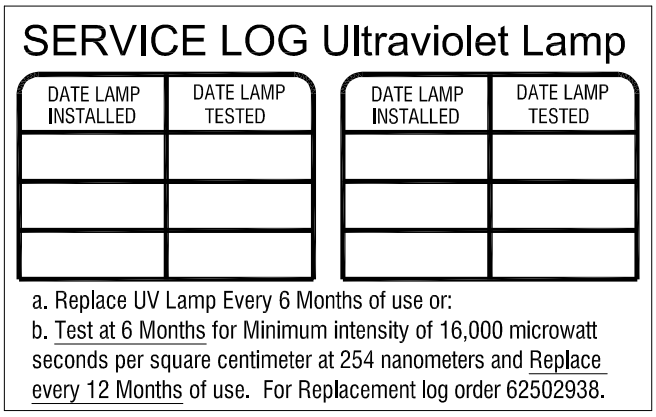

5. Decal 62502938 service log decal located by ultraviolet light (Figure 1).

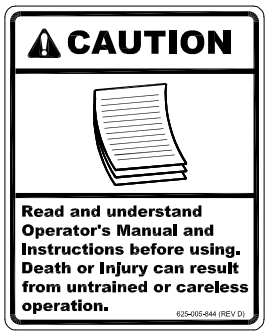

6. 625-005-844, Located on rear, (Figure 1)

7. 625-004-044 Decal, “Lower This Shelf” Located in dispenser housing (Figure 1)

8. 62500633 Decal, CB LED Display

9. 625-004-045 Decal, Water Quality-NAMA Located lower left on front door (Figure 1)

10. 625-001-030 Decal, Coster Logo, (Figure 1)

11. 625-001-025 Decal, Coster Address, Located on lower right (Figure 1)

12. 625-004-475 Decal, Serial Number Plate, Top of dispenser housing

13. N/A

14. N/A

15. 62500632 Decal, “Fuse - Pump” (Figure 1)

16. 62502110 Decal, Instruct (Non-Coin) VMC Control
    62502109 Decal Instruct (Coin Op) Early Style
    62502673 Decal Instruct (Coin Op) Current, Display on top

17. N/A

18. N/A

19. N/A

20. 625-004-555 Decal, Filter Description, Located on door front.

21. N/A

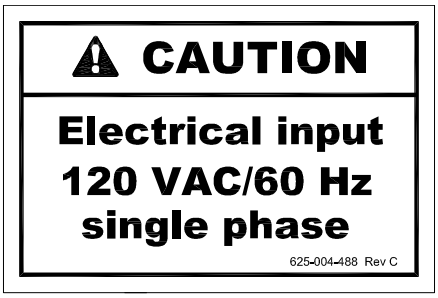

22. 625-004-488
    Located on rear (Figure 1)



23. 625-004-497,
    Located on front (Figure 1)

24. 62500687, Button Tag Set, Gallons
    62500688, Button Tag Set, Liters
    62500689, Button Tag Set, Purified Water.

25. 62502156, Panel, Rinse, Re Fill, Re Fresh.

26. 62502944 Label, Upper Outlet.

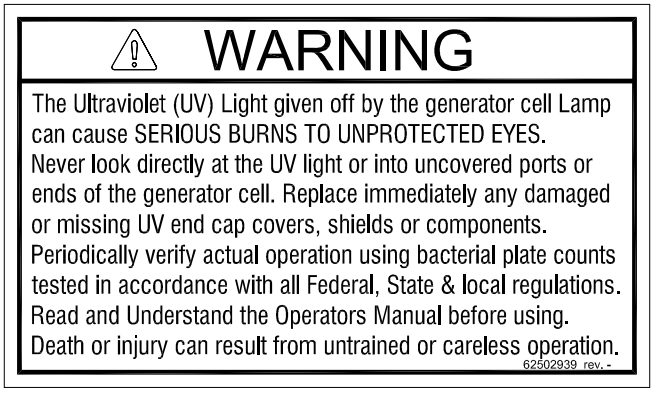

27. 62502939, Decal U.V. Warning

SAFETY FEATURES

The vending machine provides the needed safety shut offs should certain conditions exist.

The machine will not dispense if:

1 . The ultraviolet light is burned out.

2. The sump float switch on the cabinet floor has been activated as a result of a leak.

3. The drain bucket upper float switch has been activated. (Non coin operated models only)

The machine incorporates a ground fault circuit interrupter (GFC I) device, and a 5 amp fast blow fuse.

TECHNICAL SPECIFICATIONS

FULL SIZE CABINET

DIMENSIONS:

Height: .....74 Inches
Depth: .....32 Inches
Width : .....28 Inches

WEIGHT:

Dry Shipping: .....477 Lbs

CAPACITY:

Dispensing Flow: .....5 GPM Max.

FEED PRESSURE:

Min: .....20 psi
Max: .....100 psi

PLUMBING CONNECTIONS:

Feed: .....1/2 Inch FNPT
Drain: .....1/2 Inch FNPT

ELECTRICAL:

5 amp, 110 VAC Grounded 60 HZ. GFCI Circuit

IN ISLE CABINET

DIMENSIONS:

Height: .....74 Inches
Depth: .....22 Inches
Width : .....28 Inches

WEIGHT:

Dry Shipping: .....398 Lbs

CAPACITY:

Dispensing Flow: .....5 GPM Max.

FEED PRESSURE:

Min: .....20 psi
Max: .....100 psi

PLUMBING CONNECTIONS:

Feed: .....1/2 Inch FNPT
Drain: .....1/2 Inch FNPT

ELECTRICAL:

5 amp, 110 VAC Grounded 60 HZ. GFCI Circuit

GENERAL INFORMATION

The Coster Engineering bulk water vending machines are designed to vend a drinking (reverse osmosis) water from an approved potable water supply.

The reverse osmosis (RO) water supply is customer supplied and located at a remote location from the cabinet. The RO water is pumped to the cabinet where it is filtered and treated with an ultra violet light.

1. REVERSE OSMOSIS

A reverse osmosis (RO) membrane (customer supplied and remote from cabinet) removes up to 98% of the water's total dissolved solids. Reverse osmosis is the process which produces DRINKING WATER product available to the consumer.

2. CARBON FILTRATION

Prior to ultraviolet sterilization and dispensing, a ten inch carbon impregnated filter cartridge polishes the product water removing any odors, tastes, or discolouration.

NOTE: Carbon filtration will also remove chlorine. If chlorinated municipal water is to be used, additional carbon filtration is recommended.

3. ULTRAVIOLET STERILIZATION

The final water treatment process is ultraviolet sterilization. While the product water is being dispensed, it passes through a chamber which irradiates the flow with ultraviolet light.

The bulk water vending machines will not dispense water if the UV bulb is burned out.

Water is flushed thru the UV light for approximately 3 seconds every hour **ONLY** when the unit **HAS NOT** dispensed water. This reduces the peak temperature experienced after the unit has set idle for an extended time, such as the first vend in the morning.

CONSTRUCTION

The water vending machines have a sheet metal construction with a durable polyurethane epoxy finish. The dispenser housing is made of stainless steel to provide an easy to clean rust-free dispensing area. The control system takes care of the charge and post flushes and is equipped with several shut down conditions should any maintenance be required.

FEATURES

- Choice of direct vend or coin mechanism.
- Coin mechanism can be set for "Free" vends.
- Automatic shut off on occurrence of an internal leak.
- Automatic shut off when the ultraviolet lamp fails.
- Four (4) selection push buttons standard on all units.
  1. Non-Coin, 3 Volumes plus "Stop"
  2. Coin Mech, 4 volumes, plus 18 second "Pause".
- Preset starting volumes, 1, 2, 3, & 5 gallons. (All volumes field adjustable).
- Removable drain tank for ease of service.
- Adjustable legs.
- Small cabinet size.
- Ease of component access and repair.

OPTIONS

- Dollar bill and coupon validations.
- Auxiliary water meter.
- Security lock kits.
- Wireless remote monitoring.
- Wireless cashless payment system.

INSTALLATION AND SETUP

PRELIMINARY SITE INSPECTION

WATER SERVICE

The vending machine can only be connected to an approved potable water source that will provide at least a 3 gpm feed at 20 psi and 500 ppm TDS or less. (See Measuring TDS.)

- Water feed connection - 1/2 FNPT
- Drain connection - 1/2 inch FNPT
- Plumbing should be a minimum of 1/2 ID for 100 feet or less, or 5/8 ID if distances greater than 100 feet are needed.

The vending machine placement should not exceed 100 feet from access to the nearest water source and drain connection.

WARNING: USE ONLY SANITARY APPROVED FDA MATERIALS FOR PLUMBING CONNECTIONS.

CAUTION: Under no circumstances allow your machine to freeze. Freezing may cause permanent damage to your membranes and plumbing.

ELECTRICAL SERVICE

A 15 amp, 110 VAC, 60 HZ grounded power supply will be required.

SERVICE INFORMATION

A label listing a local and/or toll free phone number for service or refund must be affixed to the unit. The label supplied by the owner/operator must be in a location visible to customers.

NOTE: Tank and pump are optional equipment.

Dual check valve (code approved for site) must be installed between customer equipment and the city water supply. See flow diagram in the Service Parts section for part number and location in system. Must conform to all applicable federal, state and local codes.

INSTALLATION & MACHINE SET UP

NOTE: Do not plug machine in or apply power until all of the required installation procedures have been completed.

NOTE: Be sure that the installation of this machine complies with all local codes (electrical, plumbing etc.) and will comply with all applicable federal, state, county and local standards for food and drinking water installations. The machine must be installed in a location free of dust and debris.

1. Move the vending machine to desired set up location. Cut the banding and remove the cardboard shell; inspect the machine for any damages that may have occured in transit.

2. Place machine on floor, adjust legs (hand adjustable) to prevent rocking.

3. Connect plumbing inlet and outlet lines and remote pump (Optional Equipment). Use guidelines specified in: “Service Connections” figure 2.

NOTE: Securely mount remote pump as close to remote storage tank as possible. Use flexible FDA approved plumbing on inlet and outlet of pump.

NOTE: Pump is customer supplied or optional equipment.

4. Install carbon and sediment filters (see Filter Maintenance section).

WARNING: Water dispensing flow rate must not exceed 5 gallons per minute (12 seconds per gallon). Faster flow rates will reduce the ultraviolet lights effectiveness. If faster dispensing rates are required, install a large capacity UV light to match the maximum dispensing rate.

SERVICE CONNECTIONS

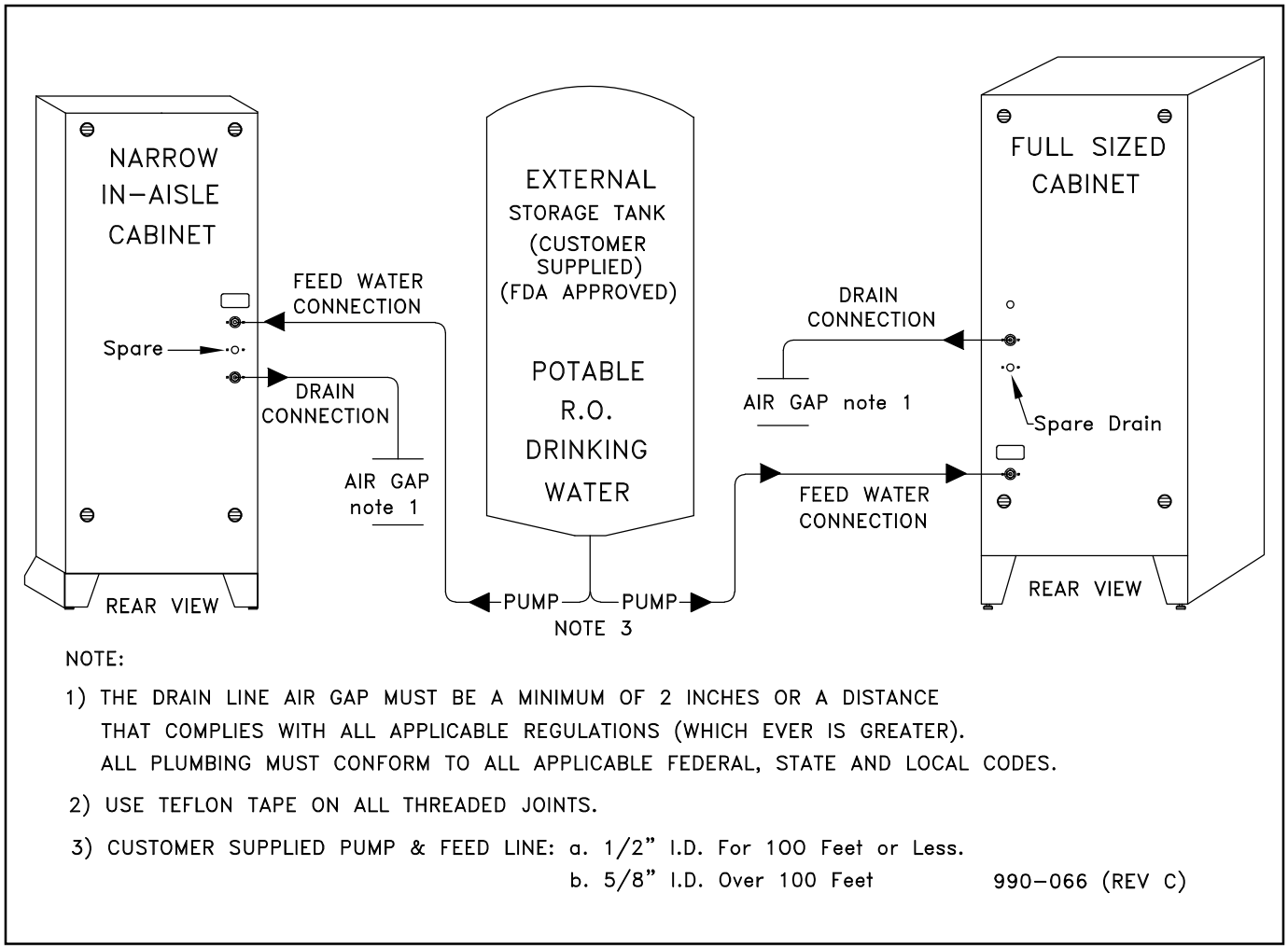

The rear view of the water vending machine showing the service connections.

FIGURE 2, SERVICE CONNECTIONS

DISPENSING / VENDING WATER

(Refer to Figure 4)

This section will detail the different modes in which the machine will dispense water, how to set each mode, and how the selection button will react for each mode.

Non-Coin

Slide switch “A” up to “MANUAL VEND” position (see fig. 3). Slide internal switch “B” left to “RUN” position. J1 jumper is between 1 and 2.

Top Button: One (1) gallon

2nd Button: STOP

3rd Button: Three (3) gallons*

4th Button: Five (5) gallons

* In the non-coin mode, this button can be calibrated (using the calibration procedures) to a specific volume or “Hold to Vend”, allowing customers to top off their containers.

Coin-Operated

Slide switch “A” down to “COIN VEND” position (see figure 3). Slide internal switch “B” left to “RUN” position. J1 jumper is between 1 and 2.

Top Button: One (1) gallon

2nd Button: Two (2) gallons

3rd Button: Three (3) gallons

4th Button: Five (5) gallons

IMPORTANT: All factory calibrated volumes are nominal only. They must be verified on site when the unit is put into service. Use the calibration procedure to adjust volumes as required. Seal electrical box after calibration, if required by local or state regulations.

NOTE: When operating in Coin Mode, the red “pause” button, on front of door, may be pressed to interrupt a vend. The vend will continue after eighteen (18) seconds or when the pause button is pressed a second time. This allows several smaller containers to be used for a larger selection volume.

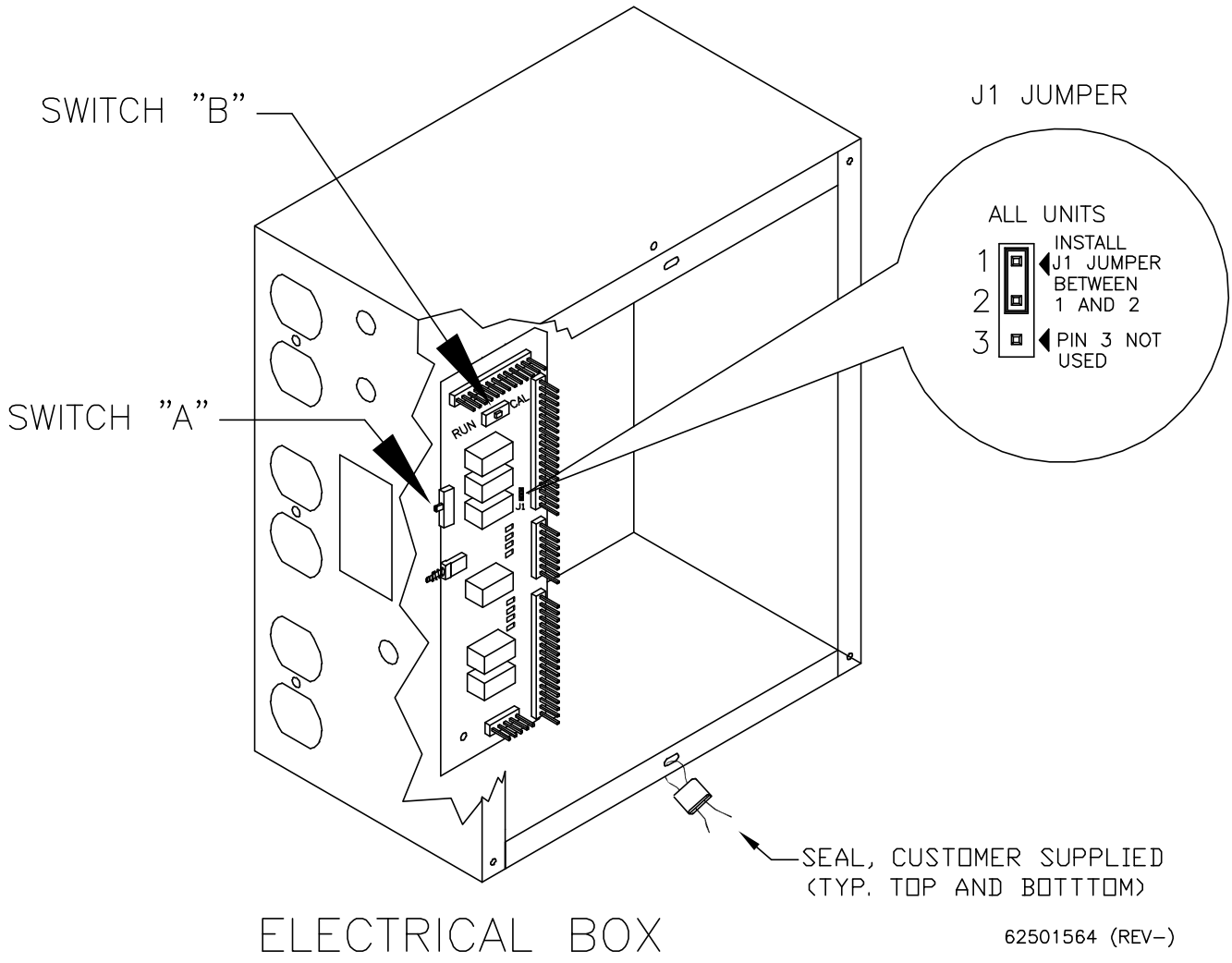
SWITCH "B"
SWITCH "A"
J1 JUMPER
ALL UNITS
1
2
3
INSTALL J1 JUMPER BETWEEN 1 AND 2
PIN 3 NOT USED
RUN
CAL
J1
SEAL, CUSTOMER SUPPLIED
(TYP. TOP AND BOTTTOM)
ELECTRICAL BOX
62501564 (REV-)

FIGURE 4

CALIBRATION

(Refer to Figure 4)

IMPORTANT: Vending in the "calibration" mode will cause the existing volume calibration of that button to be changed. All button volumes should be verified after returning the internal calibration switch "B" left to the "RUN" position. All buttons are "Hold to Vend" in calibration mode.

WARNING: Turn off power before removing electrical box cover to access slide switch "B" or "J1" jumper. replace electrical box cover before restoring electrical power in all steps.

TO CALIBRATE A DESIRED VOLUME:

1. Slide switch "A" up to "MANUAL VEND" position. **NOTE: This is the normal position of non-coin units.**

2. Slide internal switch "B" right to "CAL" position.

3. Press and hold the red "PAUSE VEND" button and simultaneously push the desired selection button to reset the respective internal counter. Release both buttons. **(Note: Coin mech unit red pause button is on outside of door. Non-coin unit red pause button is on inside of door.)**

4. Position empty container of the correct desired volume under spout.

5. Press and hold individual selection button until container holds the desired volume of water. **(Note: The selection button can be pressed and released as many times as it takes to fill the container, but once a container is over filled, the container must be emptied, and then steps 3, 4 and 5 repeated.)**

6. Repeat steps 2, 3, and 4 for other selections.

7. Return internal calibration slide switch "B" left to "RUN" position.

8. Coin-operated machines, slide switch "A" down to "COIN VEND" position.

9. Verify all calibrated volumes by filling a container for each selection button.

TO INCREASE THE VOLUME OF A CALIBRATED SELECTION (COIN AND NON-COIN UNITS:

1 . Leave partially filled container under spout.

2. Slide switch "A" up to "MANUAL VEND" position. **NOTE:** This is normal position of non-coin units.

3. Slide internal switch "B" right to "CAL" position.

4. Press and hold individual selection button until container holds desired amount of water.

5. Return internal calibration slide switch 'B" left to "RUN" position.

6. Coin-operated machines, slide switch "A" down to "COIN VEND" position.

7. Verify correct volumes by filling a container for each selection button.

TO DECREASE VOLUME:

Once a container is overfilled, the calibration process must be restarted from the beginning. (See “To calibrate to a desired volume”).

“HOLD TO VEND” BUTTON CONVERSION (NON-COIN UNITS):

1. Leave slide switch “A” up in “MANUAL VEND” position. **NOTE: This is the normal position of Non-Coin units.**

2. Slide internal switch “B” right to “CAL” position.

3. Press and hold the selection button and the red “PAUSE VEND” button to reset the internal counter. Release both buttons.

4. Press and quickly release same selection button, to dispense as small amount of water as possible.

5. Slide internal switch “B” left to “RUN” position. **IMPORTANT: Selection buttons must not be pushed before power is turned off.**

6. Turn off power to machine.

7. Turn on power and verify “HOLD TO VEND” button operation. **NOTE: If button does not properly function as “Hold to Vend” repeat steps 1 through 7.**

TO RETURN CALIBRATION TO PRESET NOMINAL 1,2,3, AND 5 GALLONS:

1. Slide switch “A” up to “MANUAL VEND” position. **NOTE: This is the normal position of non-coin units.**

2. Slide internal switch “B” right to “CAL” position.

3. Press and hold the red “PAUSE button and simultaneously push and release all selection buttons one at a time to reset the respective internal counters. Release “pause button” last.

   NOTE: (Coin-Op.) Red Pause Button is on outside of door. (Non-Coin) Red Pause Button is on inside of door.

4. Slide internal switch “B” left “RUN” position.

5. Turn off power to machine.
   IMPORTANT: Selection buttons must not be pushed before power is turned off.

6. Coin-operated machines, slide switch “A” down to “COIN VEND” position.

7. Return power to unit.

8. Verify all calibrated volumes by filling a container for each selection button.

MAINTENANCE

General maintenance depends upon the feed water quality and use of the machine. To build a proper maintenance schedule, a log sheet, as shown in the rear of this manual, should be prepared for each machine. The log sheet will contain information about feedwater and drinking water. Periodic analysis of water quality and system parameters, will help track the performance of the machine and indicate if any replacement parts are needed. Additionally, the log sheet will track replacement dates of any components, system repairs, or comments concerning operation.

The following schedule is a “Rule-of-Thumb” guide to performing general maintenance and service on the water vending machines. For additional maintenance information addressed in the schedule below, please refer to the appropriate sections in the manual.

TESTING GROUND FAULT CIRCUIT INTERRUPTER (GFCI) DUPLEX RECEPTACLE AND POWER CORD

Push in test button reset button will pop out and machine power is shut OFF. Push reset button firmly in to latch and reset power.

If GFCI fails to trip out or reset properly, **DO Not USE**. Call a qualified electrician.

MAINTENANCE SCHEDULE

Daily

- Clean and disinfect the customer contact surfaces.
- Clean exterior of cabinet.
- Check the machine for good working order.

Weekly Or Bimonthly

- Clean and disinfect the drain tank (See Cleaning -Sterilization Section).
- Measure and record the TDS of the feed water. (See Measuring TDS Section).
- Check machine for leaks or damage.
- Test ground fault interrupter (GFCI) duplex receptacle.
- Check carbon filter. Replace if necessary.
- Perform proper maintenance of any pretreatment equipment (R.O., D.I., Softeners, Filters).

3 Months

- Coliform test.

  NOTE: Must conform to all state and local regulations.

6 Months

- Test UV bulb intensity or replace bulb.
- Check Quartz Sleeve and clean if necessary.

Yearly

- Sterilization as required.
- Replace UV bulb
- Clean UV Quartz Sleeve

  NOTE: Must conform to all state and local regulations.



CAUTION: Your actual maintenance schedule may vary according to water quality, machine usage, and must conform to all state and local requirements. Please adjust the maintenance schedule to best suit your needs. However, for any filter replacement please do not exceed the maximum period of time or volume of water recommended for their respective replacement.

FILTER MAINTENANCE

The following points should be observed when changing filters.

1. Filter housings are to be screwed on only hand tight.

2. Close isolation valve.

3. Relieve line pressure before attempting to unscrew filter housing by vending water.

4. Unscrew filter cartridge housing (counter clockwise) by hand.

5. Discard old filter.

6. Clean filter housing and rinse with clean water.

NOTE: If the interior of the filter housing is dirty, a cleaning and disinfection will be required. (See Sterilization Section).

7. Insert new cartridge. To prevent contamination, do not touch the new cartridge or the inside of the housing with unclean hands. Make sure cartridge filter is lined up on top and bottom posts before screwing cartridge housing tight.

FILTER CHANGE SCHEDULE

	Check/Test	Replacement*	Max Time*
Carbon	1-2 weeks	As required/Approx. 3,000 Gallons	1 month

8. Replace housing. Check to make sure o-ring is clean, properly seated and lubricated before assembling. Tighten hand tight only, check for leaks.

9. Open isolation valve. Allow water to run a few seconds to clear air from the system.

NOTE: Use only food grade grease for lubrication.

***NOTE: Filter replacement schedule listed below is maximum amount of time period and volume. Actual replacement must be tailored to specific feed water quality.**

INLET STRAINER AND DUAL CHECK VALVES

Inspect annually or more frequently if required by local, state or federal codes or other conditions.

Clean inlet strainer by back flushing with clean potable water. Dual check back flow preventers must maintain a minimum of 28” (1.0 psi) water column.

SOLENOID VALVE

1. The solenoid valve contains no field replaceable internal components.

2. The solenoid valve inlet screen protects it from particles. This screen can be removed and cleaned by flushing with clean water.

3. The solenoid valve will be inoperative if the coil is defective or if no power is reaching the valve.

4. Any dripping fittings should be immediately tightened to avoid a potentially serious leak.

MEASURING TDS

NOTE: You will need a TDS meter to complete this test. They are available commercially or from Coster Engineering.

The TDS (total dissolved solids) of your water should be measured periodically to ensure its quality and recorded on the log sheet located in the back of this manual.

The TDS of your water should not exceed 500 ppm.

When taking a TDS reading, follow the instructions included with your meter.

UV LIGHT MAINTENANCE

WARNING: Ultraviolet light given off by the UV lamp can cause serious burns to unprotected eyes. Do not operate the UV Lamp when it is removed from the UV chamber. Unintended use or damage of the system may result in the exposure of dangerous UV radiation. UV radiation may, even in little doses, cause harm to the eyes and skin.

WARNING: When testing UV intensity, always wear UV safety goggles (available from Coster Engineering). Exposure may result in irreversible eye damage.

WARNING: Cover all exposed skin surfaces or skin damage may result. Perform test during closed or quiet times. Keep all unprotected persons away from direct view of the UV lamp.

IMPORTANT: A dirty quartz sleeve will reduce UV light transmission to the water and reduce disinfection performance of the UV light. When feeding a UV light with water containing higher mineral content than RO water, such as alkaline water, the Quartz Sleeve coating buildup is accelerated and requires more frequent cleaning. Initially, check sleeve monthly or bimonthly and adjust cleaning procedure to suit the type of water that you are vending. Refer to vending machine operators manual and UV light manufacturer operators manual quartz sleeve cleaning instructions.

TESTING LAMP INTENSITY/REPLACEMENT

Option 1. Replace UV Lamp every 6 months of use.

Option 2. Test at 6 months and replace every 12 months of use. A minimum intensity level of 16,000 UWs/cm2 at 254 nm wave length shall be maintained for the life of the lamp.

Readings are obtained with a commercially available portable UV intensity meter. Consult Coster Engineering for recommended meter type. Follow all instructions and safety procedures included with meter.

An LED monitor located on the side of the UV assembly will indicate whether the UV bulb is lit. If this monitor light is not on, it will prevent the machine from dispensing water.

If the LED monitor goes out, shut off water supply to sterilizer immediately and disconnect power supply. Replace UV lamp with a new one by following installation directions. Regularly inspect the unit to ensure that the monitor light is still glowing.

QUARTZ JACKET CLEANING/ REPLACEMENT

1. Disconnect power to vending machine.

2. Shut off the water supply.

3. Remove UV chamber from mounting clamps.

4. Disconnect the lamp connector at the end of the UV chamber and remove lamp from chamber.

5. Remove Quartz Sleeve as follows:

a. Unscrew retaining nuts, remove floating spring, and carefully slide sleeve out of UV chamber.

b. Clean sleeve with vinegar or some other mild acidic solution, then rinse with water.

c. Clean and lubricate O-rings with food grade lubricant or replace with new O-rings.

6. Reinstall Quartz Sleeve in UV chamber as follows. **NOTE:** Be sure no marks or fingerprints are on sleeve or lamp.

a. Position sleeve in chamber allowing sleeve to protrude an equal distance at both ends of chamber.

b. Slide O-rings onto each end of sleeve.

c. Reinstall retaining nuts and floating spring.



IMPORTANT: Glass Quartz Sleeve is fragile, hand tighten nuts only.

7. Install UV lamp, lamp connector, and secure UV chamber in mounting clamps.

8. Test the unit by plugging it into the electrical outlet. The indicator light on the side of the housing should glow steadily within a few seconds. If the light does not come on or continue to glow steadily, check lamp electrical connection. Replace lamp if necessary

9. Turn on water supply and check all connections for leaks. Allow the water to run for a few minutes to clear out any air or dust that may be in the cell.

CLEANING - STERILIZATION

CUSTOMER CONTACT SURFACES

Cleaning and disinfecting of the customer contact surfaces must conform to state and local codes. However, it is recommended that daily cleaning and disinfecting of the customer contact surfaces be performed.

The customer contact surfaces of the machine are the dispenser housing and nozzle. The following steps outline their cleaning and disinfection procedure.

1. Wash off any dirt or debris in or around the dispenser housing and dispensing nozzle with a mild detergent solution. Rinse with clean water.

2. Spray a chlorine based disinfecting solution at 100 ppm onto the dispenser housing and nozzle. Allow to air dry.

NOTE: Prepare 100 ppm chlorine based cleaning solution as follows:

- **Mix one (1) Tablespoon standard household bleach containing 5.25% sodium hypochlorite with one (1) gallon clean R.O. water (or other low TDS water).**

NOTE: Stronger more concentrated solutions of chlorine may cause rusting and damage to stainless steel and other components.

PLUMBING

This procedure should be used if a bacterial contamination is suspected in the machine. Bacteria may grow in the machine if it is taken out of service and stored. This growth can sometimes occur in a one to two week period depending upon the conditions. No matter the cause, if you suspect bacterial contamination of a vending machine, this contamination should be eliminated through the following sanitization procedure.

1. The following materials will be needed for the disinfection of the plumbing system.

   - Two (2) 5 gallon pails.

   - 6 to 9 pints of 3% hydrogen peroxide.

2. Obtain potable drinking water in two (2) five gallon pails.

3. Add 3 pints of a 3% hydrogen peroxide solution to the water in each pail.

4. Discard all filters.

5. Disconnect water inlet on rear of unit.

6. Fill all plumbing, filter housings and UV light with disinfection solution by use of gravity or a portable feed pump.

7. Allow the sterilization solution to set for 3 to 12 hours. The longer the time, the greater the killing effectiveness of the sterilization solution.

8. Flush all sterilization solution from machine by reconnecting inlet and holding vend button.



CAUTION: Run sufficient water to ensure total flushing of unit.

9. Install new filters.

ELECTRICAL SECTION

TESTING GROUND FAULT CIRCUIT INTERRUPTER (GFCI) DUPLEX RECEPTACLE AND POWER CORD

Push in test button. Reset button will pop out and machine power is shut OFF. Push reset button firmly in to latch and reset power.

If GFCI fails to trip out or reset properly, **DO NOT USE.** Call a qualified electrician.

ELECTRICAL CONTROL OVERVIEW

Dispensing Cycle

Before water can be vended or dispensed, the following indicators on the electrical box (see figure 4) must be lit:

1. “Power”
2. Cabinet “Sump” leak level
3. “Feed” water pressure
4. “UV #1 (for drinking water)

If the “Vend Water Supply” indicator is lit, this will prevent credit from being accepted (coin-op units only) and water from being dispensed or vended.

Refer to “Vending Operation” for the different settings for dispensing or vending water.

UV Temperature Flush

Water will be flushed through the UV for approximately (3) seconds every hour to reduce the UV temperature and bacterial growth. Every time water is vended or dispensed, the (1) hour timer will be reset, so that water is not wasted during times of heavy usage.

Drain Tank

The lower float in the drain tank must be in the “up” position for (3) seconds (continuous) to turn the drain pump on. When the float is down for 4 seconds (continuous), the pump will turn off.

WIRING DIAGRAM
ELECTRICAL BOX (ALL UNITS)

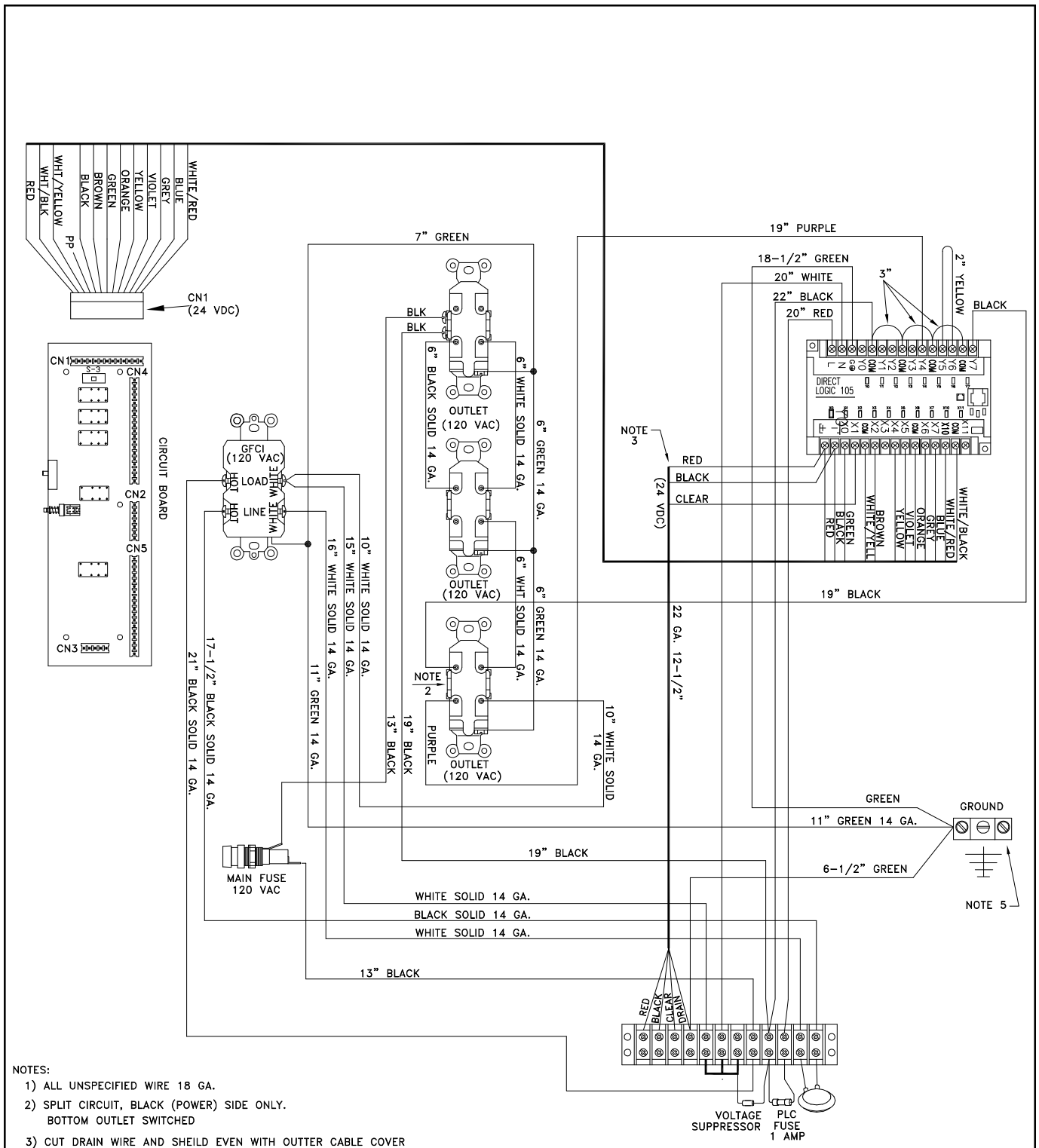

NOTES:

1) ALL UNSPECIFIED WIRE 18 GA.
2) SPLIT CIRCUIT, BLACK (POWER) SIDE ONLY.
   BOTTOM OUTLET SWITCHED
3) CUT DRAIN WIRE AND SHEILD EVEN WITH OUTTER CABLE COVER
   DO NOT HOOK UP DRAIN WIRE ON THIS END.
4) TORQUE PLC TERMINALS(5) TO 6 INCH/OUNCES
5) RIGHT GROUND LUG RESERVED FOR MAIN POWER CORD GROUND ONLY

62500627 (REV S) 2OF2

WIRING DIAGRAM
120 VAC HARNESS (BW-100)

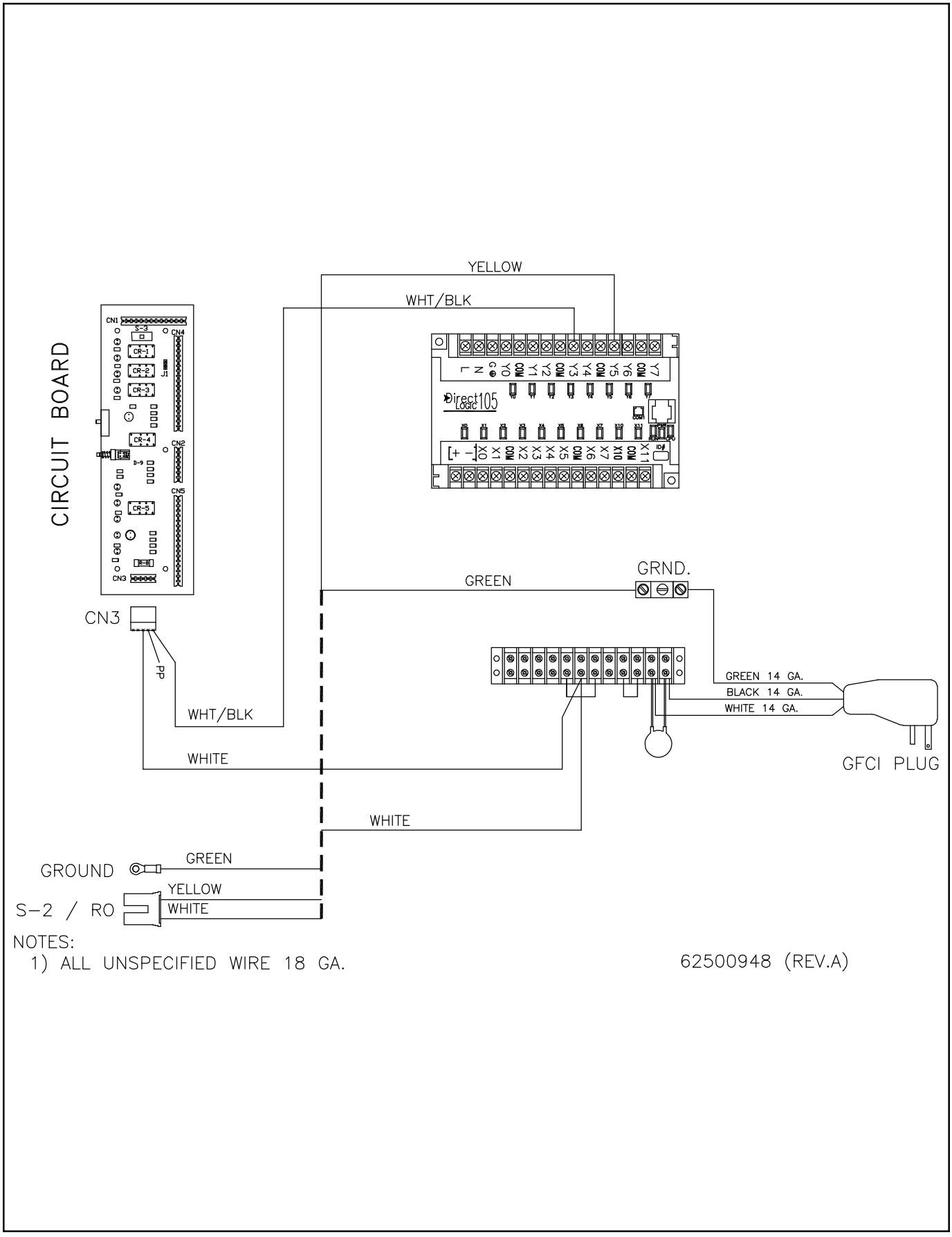

WIRING DIAGRAM
24 VDC HARNESS (ALL UNITS)

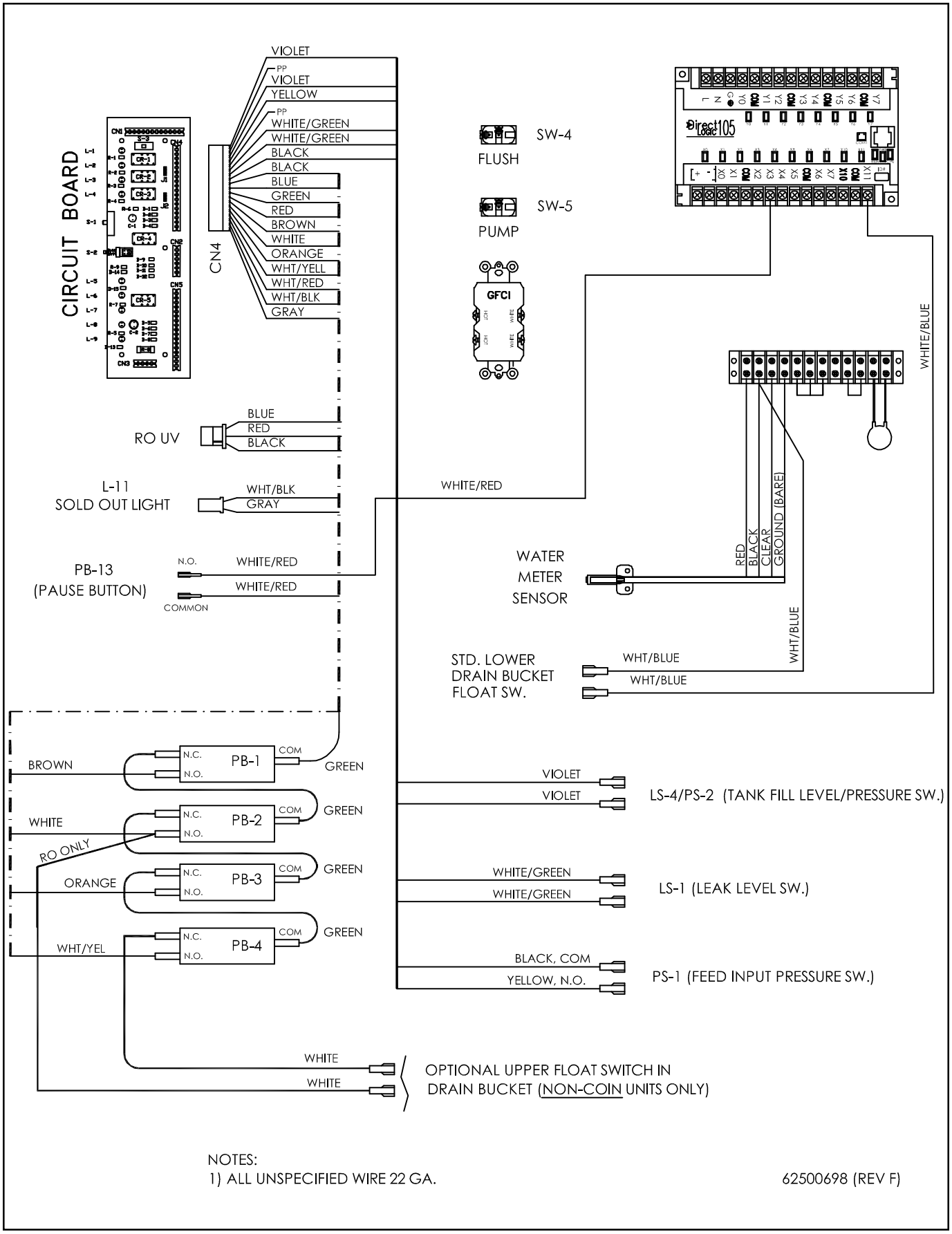

NOTES:
1) ALL UNSPECIFIED WIRE 22 GA.

62500698 (REV F)

WIRING DIAGRAM
4 SELECT COIN MECH HARNESS (COIN MECHANISMS UNITS ONLY)

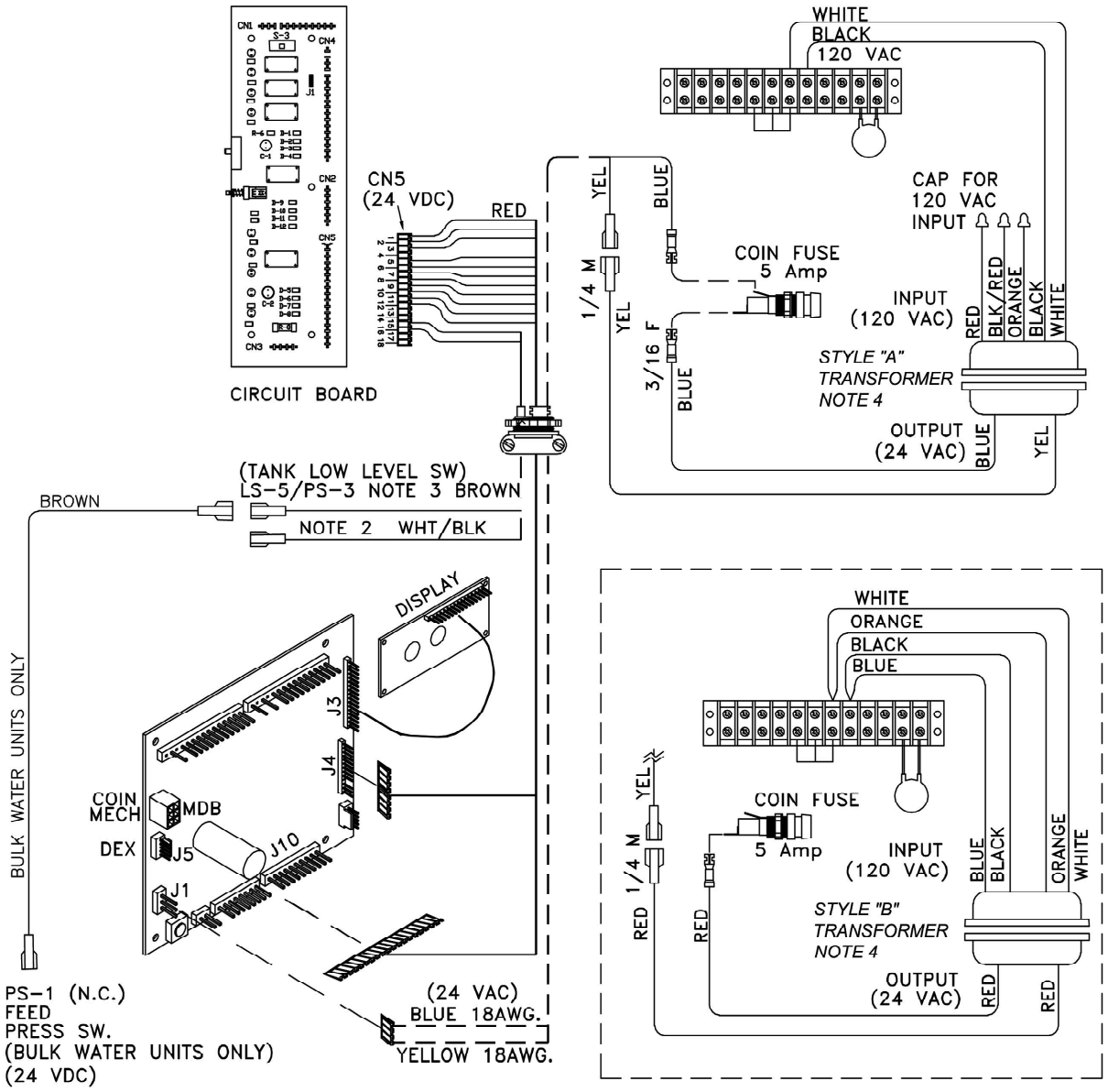

62502028 (REV E)

CLEANING - SANITIZATION

CUSTOMER CONTACT SURFACES

Cleaning and disinfecting of the customer contact surfaces must conform to state and local codes. However, it is recommended that daily cleaning and disinfecting of the customer contact surfaces be performed.

The customer contact surfaces of the Water Vending Machines are the dispensing chamber and nozzle. The following steps outline their cleaning and disinfection procedure.

1. Wash off any dirt or debris in or around the dispensing chamber and dispensing nozzle with a mild detergent solution. Rinse with clean water.

2. Spray a chlorine based disinfecting solution at 100 ppm into the dispensing chamber and nozzle. Allow to air dry.

NOTE: Prepare 100 PPM chlorine based cleaning solution as follows:

- Mix one (1) gallon of clean RO water with one (1) tablespoon of standard household bleach containing 5.25 % sodium hypochlorite.

NOTE: Stronger more concentrated solutions of chlorine may cause rusting and damage to stainless steel and other components.

DRAIN TANK

The drain tank can get bacterial growth within a few days. Therefore, a regular cleaning procedure should be completed.

1. Remove drain tank from bracket.

2. Wash, rinse and disinfect internal surfaces using cleaning solutions above.

3. Fill drain tank with a gallon of clean R.O. water to verify prime of drain pump, and proper operation of float switches.

SANITIZATION OF COMPONENTS AND PLUMBING

PURPOSE

This procedure should be used if a bacterial contamination is suspected in the vending machine. Bacteria may grow in the machine if it is taken out of service and stored. This growth can sometimes occur in a one to two week period depending upon the conditions. No matter the cause, if you suspect bacterial contamination of a vending machine, this contamination should be eliminated through the following sanitization procedure.



WARNING: The temperature of your hydrogen peroxide sanitization solution should not exceed 75° Fahrenheit (24° Centigrade) or damage to the membrane may occur.

Use only drinking (reverse osmosis) water to mix the .2% (by volume) sterilization solution

EQUIPMENT

The following materials will be needed for the disinfection of the vending plumbing system.

- Two (2) 5 gallon pails.

- 6 to 9 pints of 3% hydrogen peroxide.

MIXING INSTRUCTIONS

Vend 4.5 gallons of reverse osmosis water into two five gallon pails.

Add 3 pints of a 3% hydrogen peroxide solution to the water in each pail.

1. Install new 10” carbon filter.

2. Remove inlet line to remote feed pump.

3. Insert input line of remote feed pump in sterilization solution.

4. Pump sterilization solution in RO machine by pushing vend button on front of unit until line is completely full of solution.

IMPORTANT: Amount of solution is determined by length (distance) of remote pump to unit and line size. Mix as required.

5. Allow this sanitizing solution to set for 2 to 12 hours of time. The longer your exposure time the greater the killing effectiveness of the solution.

6. Reconnect remote pump feed input line to RO drinking water source and flush all sterilization solution from machine.

IMPORTANT: Hold push button on front of machine long enough to ensure total flushing of system.

COIN MECHANISM

COIN MECHANISM OPERATING FEATURES

NOTE: The coin control board supports 24 volt standard multi-drop bus (MDB) changers with a six (6) pin connector. Contact Coster Engineering for a correct list of MDB peripherals which have been tested and found to work in conjunction with the Coster 4-Select Electronics Package.

CREDIT ACCUMULATION

Credit acceptance will be disabled when the accumulated credit equals or exceeds the highest price item. Bill acceptance is enabled when the coinage currently held in the changers coin tubes is greater than the bill to be accepted and the correct change light is off.

EXACT CHANGE

"Please Use Exact Change" is displayed when Coin Changer tubes fall below a minimum level. Bill acceptance is not allowed when "Please Use Exact Change" is displayed.

SERVICE MODE

Various Features and Options are accessed through the Service Mode of the Vending Machine Controller, (VMC). The Service Mode is comprised of three functional areas or "Menus":

-System Errors Menu
-Main Menu
-Help Menu (accessed through Main Menu)

ENTERING THE SERVICE MODE:

1. Vending machine must be in "Coin Mode" with the power on.

2. Press the round yellow push button on the VMC (See figure 5). An audible "beep" signals the service mode has been accessed. Either the System Errors Menu (If system errors are present) or the Main Menu (if no errors are present) will be displayed.

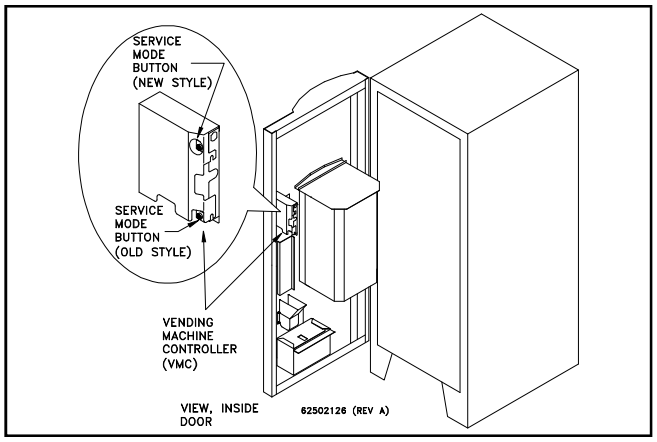

FIGURE 5

SERVICE MODE NAVIGATION

The front push buttons are used to navigate (or scroll) through the service mode.
PB-1 (Selection Push Button #1) = KEY 1 = **"Scroll UP"** in screen menu
PB-2 (Selection Push Button #2) = KEY 2 = **"Scroll DOWN"** in screen menu
PB-3 (Selection Push Button #3) = KEY 3 = **"Execute"** Function
PB-4 (Selection Push Button #4) = KEY 4 = **"Cancel"** / exit service mode

SYSTEM ERRORS MENU:

Displayed only if System Errors are present. **Note:** Displayed errors will list error type, and date and time the error was detected. **Record (write down) all errors before clearing to aid in troubleshooting.** When the error is cleared, this information permanently is deleted.

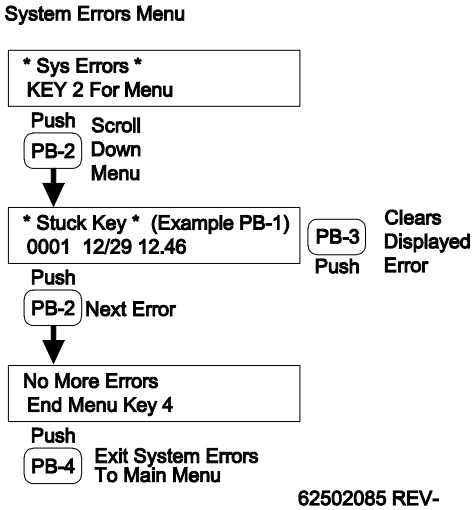

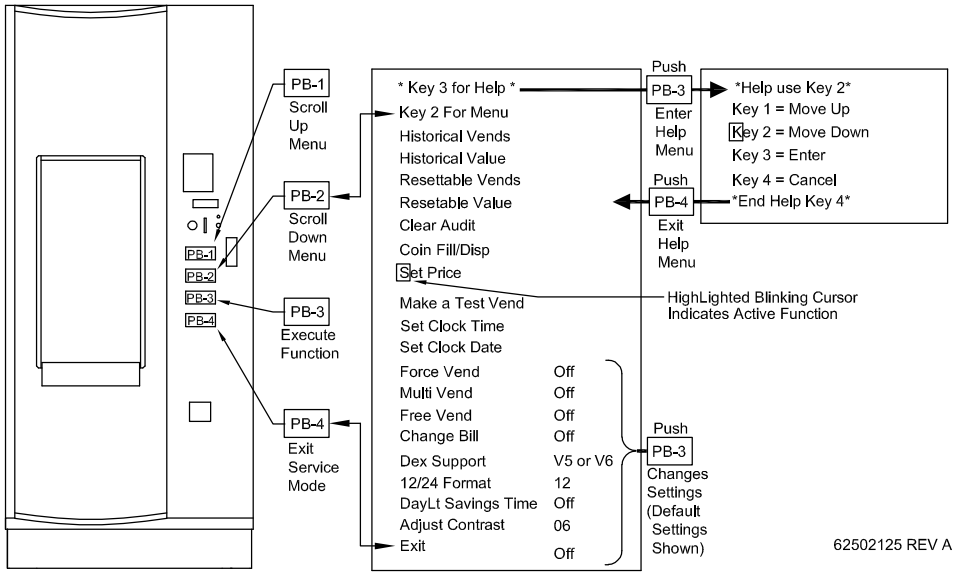

SETTING PRICE

1. Enter Service Mode.
2. Scroll through Menu to “Set Price”. Push “PB-3”
3. Push desired selection button for price change.
4. Change price as follows:

a. PB-1 = Increases Price

b. PB-2 = Decreases Price

c. PB-3 = Saves Price change.

d. PB-4 = Cancels Price change.

MAKE A TEST VEND

1. Enter Service Mode.
2. Scroll through service menu to “MAKE A TEST VEND”. Push “PB-3”
3. Push desired selection button for Test Vend.
4. Unit will;

a. Start Vending if all conditions are OK. VMC automatically returns to Main Menu.

b. Display Sold Out, which indicates a component needs repair.

COIN FILL/DISPENSING

1. Enter Service Mode.
2. Scroll through menu to “Coin Fill/Disp”. Push “PB-3”.
3. Select coin type to be dispensed.

Note: Some Coin Changers feature coin dispense buttons, allowing coin dispensing without entering the service mode.

SET CLOCK TIME/CLOCK DATE

1. Enter Service Mode.
2. Scroll through Menu to “Set Clock Time” or “Set Clock Date” Push “PB-3”.
3. Change as follows:

a. PB-1 = Increases Time/Date parameter

b. PB-2 = Decreases Time/Date parameter.

c. PB-3 = Scrolls to next parameter to change.

d. PB-4 = Cancels Changes, returns to Main Menu.

Adjust Contrast

1. Enter Service Mode.
2. Scroll through menu to “Adjust Contrast”, Push “PB-3”.
3. Adjust Contrast

a. PB-1 = Increase Contrast (Lighter Display).

b. PB-2 = Decrease Contrast (Darker Display).

c. PB-3 = Save Contrast Setting.

Important: Do not save (Push PB-3) when the display is either to dark or to light to read. To adjust or recover from a unreadable contrast display setting:

1. Enter The Service Mode (1 Audible Beep).
2. Press PB-2 Eighteen Times (18 Audible Beeps).
3. Press PB-3 One Time (1 Audible Beep).
4. Press PB-1 To Increase Contrast (Lighter Display) or PB-2 to Decrease Contrast (Darker Display) as required.

Note:

1. The VMC has a battery backup and retains the correct time when power is removed. If correct time is not retained, replace battery.

2. **Important:** Correct time setting is required for accurate DEX function reports.

ACCOUNTABILITY

1. Enter Service Mode.

2. Scroll through Menu to desired accounting parameter. “Push PB-3”

a. Historical Vends: Total Number of paid vends.

b. Historical Value: Total Value of paid vends.

c. Resettable Vends: Number of paid vends since “Clear Audit” was last used

d. Resettable Value: Value of paid vends since “Clear Audit” was last used.

e. Clear Audit: Clears Resettable Vends and Resettable Value simultaneously.

3. VCM will;

a. Display Vend or Value Count, or

b. Clear Resettable Vends and Resettable Value.

VEND OPTIONS

FORCE VEND OPTION

Default Setting: Off

When “Off”, (disabled) this option allows the customer to return coins using the coin return button without first attempting a vend selection.

Note: When the “force vend” option is “Off”, (disabled) it will allow your machine to be used as a bill changer (i.e. customer inserts bills into acceptor, presses the “coin return button”, and gets coins in return with out making a selection.) This may cause your coin tubes to be prematurely depleted.

When “Force Vend” is “On” (enabled) the customer must attempt a selection before coins will be returned. Force vend does not apply to credit from card reader.

MULTI-VEND OPTION

Default Setting: Off

Prevents automatic credit return following a successful vend. Remaining credit is shown on the display, and the customer can add credit, make a selection, or return credit using Coin Return button.

Free Vend Option Default Setting: “Off” When “Free Vend” is “On”, (enabled) all selection buttons will vend without the customer establishing credit. “Free Make Selection” will be displayed and all credit acceptance will be disabled.

Note: Setting an individual selection button price to “0” (Zero), will enable that selection button to vend without establishing credit (Free).

CHANGE BILL OPTION

Default Setting: Off

When “Change Bill” is “On”, Bill credit will be returned as coins.

Note: This allows the unit to be used as a Bill Changer, which may deplete coin tube inventory below minimum levels, causing “Please Use Exact Change” to be displayed

DEX SUPPORT OPTION

Default Setting: V5 Or V6

This option not used at this time, and has no effect on VMC operation.

12/24 FORMAT

Default Setting: 12

This option changes the Clock Setting between 12 and 24 hour formats.

DAYLIGHT SAVINGS TIME

Default Setting: Off

When “Daylight Savings Time” is “On”, automatic USA Daylight Savings Time correction is enabled.

This setting has no effect on VMC operation.

Vending Machine Controller Error Codes

ERROR NAME	ORIGIN	RESOLUTION
BV Check Sum	Bill Validator: internal problem has occurred in the firmware.	Repair or replace bill validator.
BV Communication	Bill Validator, VMC, or cabling: communications between VMC and validator stopped unexpectedly.	Ensure cabling between VMC and validator is secure, with no broken wires. In unusual cases, bill validator or VMC may need to be replaced.
BV Jammed Bill	Bill Validator: a bill has jammed in the acceptance path.	Remove the jammed bill.
BV Motor	Bill Validator: one of the motors has failed.	Repair or replace bill validator.
BV Open Box	Bill Validator: cash box was removed while the machine door was closed.	Ensure that the cash box is firmly seated on the validator. Check that the main door switch is connected properly to the VMC. Ensure that the machine door switch is not stuck closed.
BV Sensor	Bill Validator: one of the sensors has failed.	Repair or replace bill validator.
BV Stalker Full	Bill Validator: cash box is full.	Empty the cash box.
CC Check Sum	Coin Mech: internal problem has occurred in the firmware.	Repair or replace coin mech.
CC Communication	Coin Mech, VMC, or cabling: communications between VMC and coin mech stopped unexpectedly.	Ensure cabling between VMC and coin mech is secure, with no broken wires. In unusual cases, coin mech or VMC may need to be replaced.
CC Jammed Tube	Coin Mech: a payout tube has jammed.	Check for coin jams. On mechs with removable cassettes, ensure that the cassette is seated properly.
CC Sensor	Coin Mech: one of the payout tube sensors is behaving abnormally.	Repair or replace coin mech.
CC Unplugged	Coin Mech: the acceptor module seems to be missing.	Repair or replace coin mech.
CR Card Error	Card Reader: the payment media is defective.	This is an informational message; the problem may be limited to one particular card.
CR Communication	Card Reader, VMC, or cabling: communications between VMC and card reader stopped unexpectedly.	Ensure cabling between VMC and card reader is secure, with no broken wires. In unusual cases, card reader or VMC may need to be replaced.
CR Invalid Card	Card Reader: payment media problem.	This is an informational message; the problem may be limited to one particular card.
CR Jammed Card	Card Reader: payment media has jammed inside the reader.	Clear the jam.
CR Service Soon	Card Reader: reader device requires maintenance.	Perform maintenance as recommended by reader's manufacturer.
CR Tamper	Card Reader: a security breach has been detected.	This is an informational message.
Motor Error (s)	VMC: A selection button problem, detected, disabling button. Defective or miss-adjusted input pressure switch PLC inside electrical box maybe defective.	Correct fault and "make a test vend" to reset VMC motor error.
Stuck Key	VMC: A selection button or keypad key has been depressed for an abnormally long time.	Repair or replace selection button or machine keypad.

TROUBLE SHOOTING GUIDE

The trouble shooting section is divided into three guides. The first explains the indicator lights located on the front of the electrical box and should be your first resource when trouble shooting the machine. The second is a general guide to some of the more common problems in the machine and how to fix them. The third and final guide explains the function of the PLC input/output lights, and should only be used if the previous guides have failed.

ELECTRICAL BOX INDICATOR LIGHTS

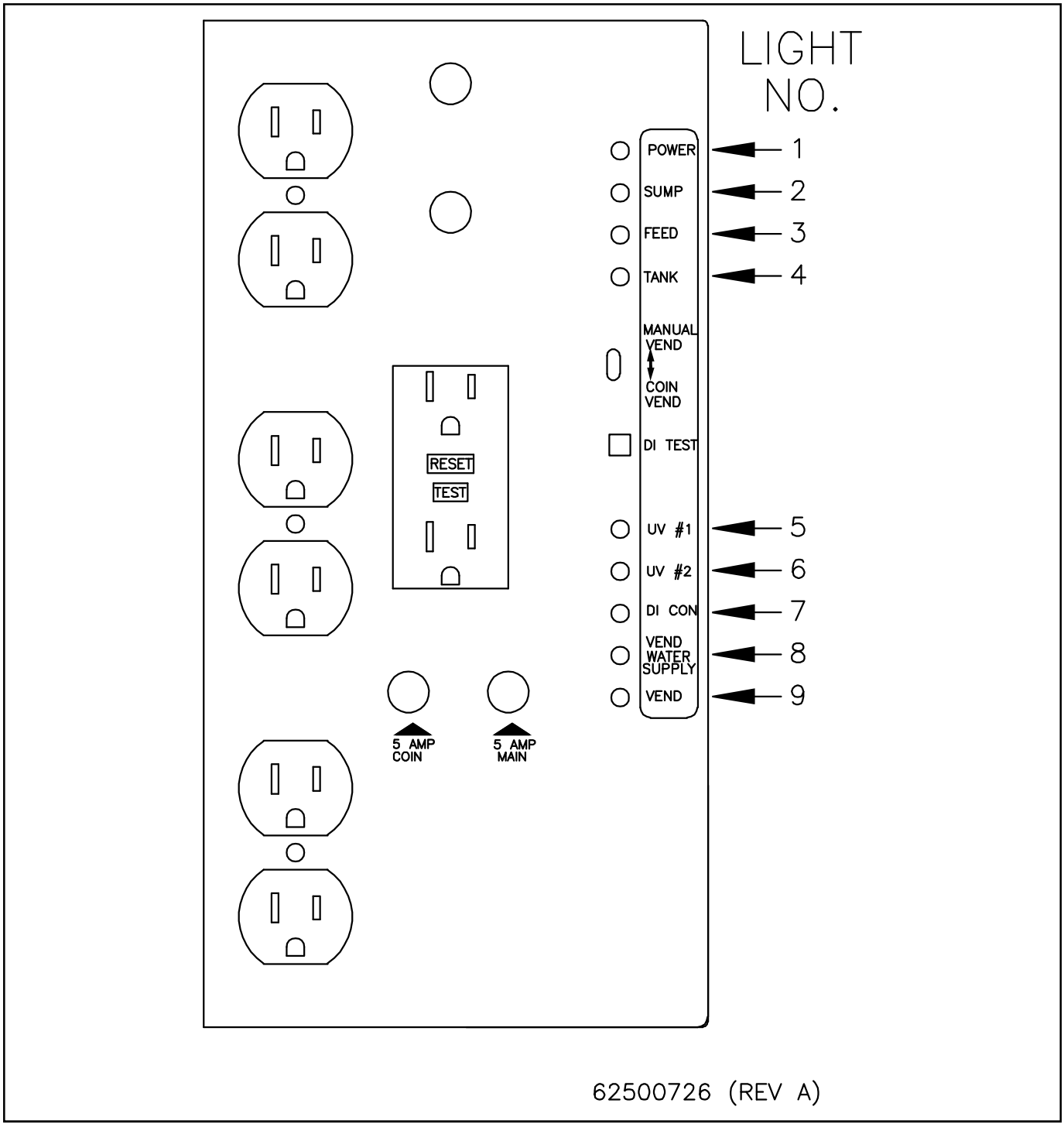

FIGURE 6

ELECTRICAL BOX INDICATOR LIGHTS
(Refer to Figure 6)

DESCRIPTION	"ON" INDICATES	"OFF" INDICATES	PROBLEM CORRECTION
1. Green Main "power"	No problem Power on	Problem Unit unplugged Main 5 amp Fuse blown PLC 1 amp fuse blown (Refer to wiring diagram page 28.) Tripped GFCI	---- Plug in Check for shorted voltage suppressor (refer to electrical box wiring diagram and electrical box component location). **Caution: Do not operate machine with voltage suppressor. Damage to PLC and other electrical components may result.** Check for shorted wires. Replace fuse. if fuse blows again, replace PLC. Reset, check for ground faults and loose wires.
2. Green Cabnet "sump"	No problem Sump dry	Problem Machine flooded Bad level switch	---- Check for leaks, fix, remove water. Replace level switch (LS-1)
3. Green "Feed" pressure	No problem Sufficient water supply pressure	Problem Insufficient water supply pressure Bad pressure switch (ps-3)	---- Open supply valve, fix supply line restriction, repair or replace supply pump Replace pressure switch
4. N/A	N/A	N/A	N/A
5. Green "UV #1 light"	No problem UV working	Problem UV assembly not working Drinking water will not vend	---- Check UV cord/plug connections, replace bulb, ballast if needed.
6. N/A	N/A	N/A	N/A
7. N/A	N/A	N/A	N/A
8. Red "Vend water supply"	Problem Insufficient water supply pressure. Bad pressure switch	No problem Sufficient water supply pressure	---- Open supply valve, fix supply line restriction, repair or replace supply pump. Replace pressure switch
9. Green "vending"	Unit is vending (light is slightly delayed)	Unit is not vending	----

GENERAL TROUBLE SHOOTING

PROBLEM	CAUSE	CORRECTION
1. Drain pump won't start or stop.	Defective float switch in tank. Dirt in pump check valve.	Check and replace if necessary. (See electrical sect.) Remove pump head and clean or replace.
2. Dispenser nozzle leak.	Dirt or worn seal in solenoid valve.	Clean or replace seal in solenoid valve. (See solenoid valve sect.)
3. Water will not dispense.	Indicators # 1, 2, 3, and 5 (Fig. 4) must be On to dispense water, #8 and 9 must be off. Indicator #9 on, but unit is not dispensing.	Use table 3 to trouble shoot. Check for loss of feed pressure, obstruction in plumbing, filter and nozzle screen and proper operation of delivery pump.
4. UV light will not light.	Defective UV lamp. Slow unit.	Replace. Wait 3-5 minutes.
5. Low UV output reading.	Old or defective lamp. Dirty lamp or quartz.	Replace. Remove and clean carefully.
6. Long vends (Over-filling) or Short vends. (Under-filling)	Defective water meter. Volume incorrectly set. Faulty water meter sensor.	Check for smooth and continuous needle rotation while vending. Recalibrate volume. Check for proper positioning.
7. Multiple electrical problems on a NEW machine.	Low voltage or switched polarity. Check voltage and polarity.	Call electrician to correct problem.
8. Coin mechanism will not accept money.	"Out of Service" is lit. Bad connection. Bad coin mechanism.	Indicator # 1, 2 and 5 must be on and # 8 and 9 off to accept money. (Fig. 4) Have electrician examine for loose wires or connector. Replace.

PLC INDICATOR LIGHTS. (Ref. Fig. 7)

The PLC is the heart of the control system, and each input and output has a corresponding indicator which is lit when the input or output is energized. The following table lists each indicator, a short description of its function and how it relates to other functions in the machine. In general, if an output (signified by "Y") is lit, but the corresponding component is not working, a wire or component failure has probably occurred. If an input (signified by "X") should be lit, but isn't, then again, it can probably be traced to a failed component or wire. Use the wiring diagrams in the electrical section to help trace specific component or wiring problems. In rare instances, the PCB controller or PLC may have failed.

INDICATOR	DESCRIPTION	FUNCTION
Run	Run mode	Should always be on when power is on. If not; replace PLC.
PWR	Power	Should always be on when unit is plugged in. If not; check power wiring to PLC or Replace PLC.
CPU	CPU fault	If lit; cycle power to unit. (Off for at least 5 seconds) If still lit; replace PLC. **NOTE: thoroughly test all function of machine after a CPU fault is cleared.**
OUTPUTS		
Y0	----	N/A
Y1	----	N/A
Y2	----	N/A
Y3	Master vend relay	When lit, machine should be dispensing water. (Machine will not accept money.)
Y4	----	N/A
Y5	Solenoid Valve	When lit, valve S-2 should be open in response to either the first or second selection button (PB-1) or PB-2) being pressed.
Y6	Solenoid Valve	When lit, valve S-2 should be open in response to either the third or fourth selection button (PB-3) or PB-4) being pressed.
Y7	Drain Pump	When lit, drain pump should be energized.
INPUTS		
XO	----	N/A
X1	Water meter	This LED should flash rapidly while water is vending, if not, then adjust water meter sensor, check wiring, or replace sensor.
X2	Run/calibrate switch	LED should be lit when switch "B" is in "calibrate position (coin mode only). When in the "manual" (non-coin) mode, this input is tied to the second selection button (PB-2) and the upper drain tank float, and should stop the vending when PB-2 or the upper drain tank float is energized.
X3	Pause button	Should light when pause button (PB-13) is pressed. Pause button is used to reset volumetric counters in "calibrate" mode and to momentarily pause water flow during vending.
X4	PB-1	Should be lit when first selection button is pressed.
X5	PB-2	Should be lit when second selection button is pressed.
X6	PB-3	Should be lit when third selection button is pressed.
X7	PB-4	Should be lit when fourth selection button is pressed.
X8	----	N/A
X9	----	N/A
X10	----	N/A
X11	Drain Tank Float	Should light when the drain tank level goes above the lower float switch.

PLC AND GENERAL TROUBLE SHOOTING

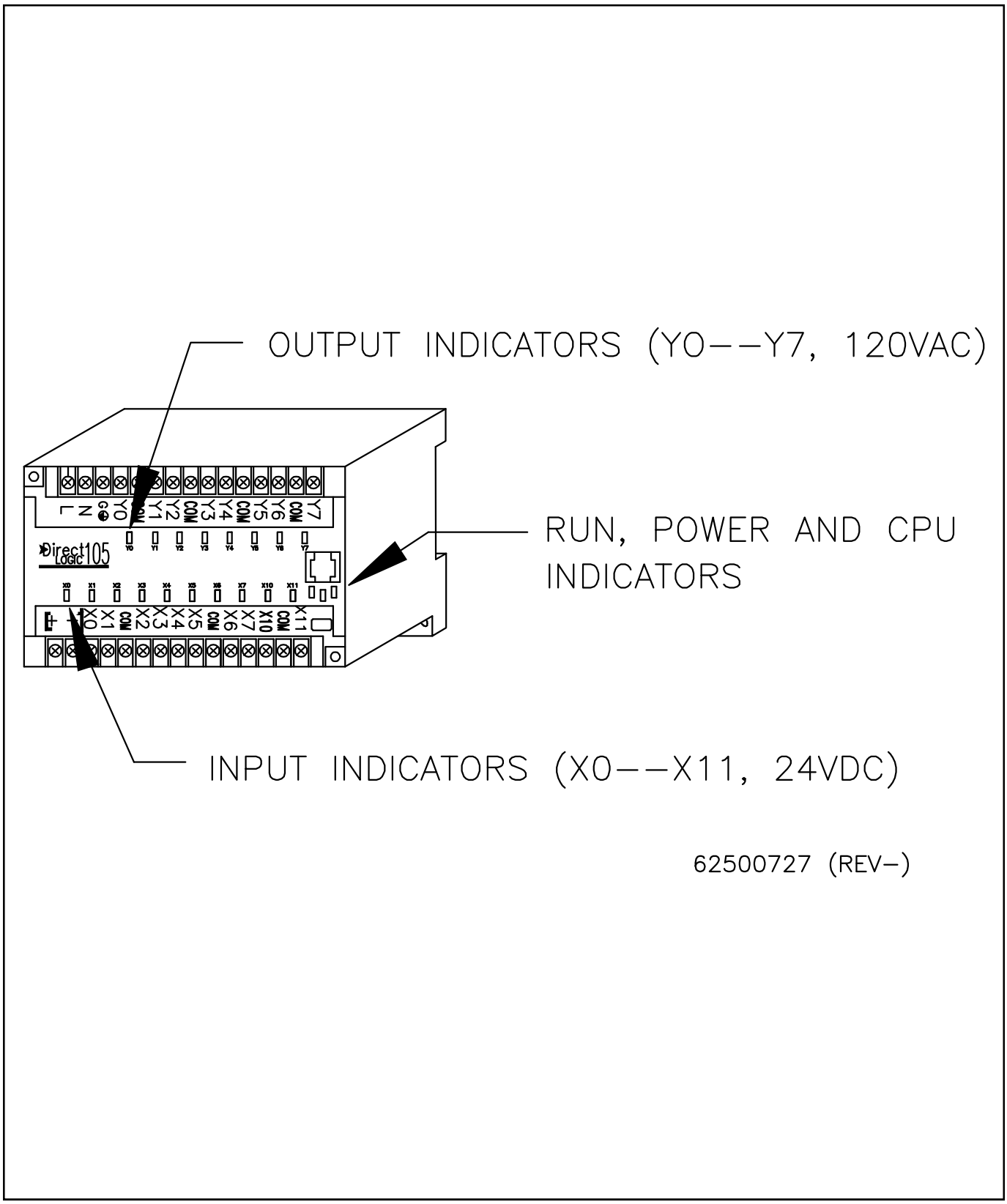

PLC INDICATOR LIGHTS FIGURE 7

SERVICE PARTS

It is the policy of Coster Engineering to constantly improve its products whenever it is practical to do so.

Coster Engineering must therefore reserve the right to redesign or change its equipment or component parts thereof without incurring the obligation to install or furnish such changes on equipment previously delivered.

INSTRUCTIONS FOR ORDERING PARTS

1. The reference numbers in the illustrations correspond to the numbers shown in the "Reference Number" column in the parts listing. The quantity in the "number required" column is the number of parts used in the accompanying illustration. The term "A/R" for number required indicates "as required" where the quantity may vary. Order all parts by their part number and description.

2. Always mention the identification number of the code and serial numbers found on the name plate of the unit on which the part is to be used. Much delay and confusion can be avoided when correct numbers are specified on parts order and correspondence.

3. Owner, order all parts through your local dealer.

4. Dealers must indicate how to ship; whether by truck, rail freight, express, or parcel post.

5. Collect phone calls are not accepted.

6. Address all orders for parts as follows:

COSTER ENGINEERING
217 E PLUM STREET
MANKATO, MN 56001
PH (844) 975-1100
FAX (507) 549-1101
costerwater.com

INSTRUCTIONS FOR RETURNING PARTS FOR ADJUSTMENT

1. To assure prompt handling of claims, your dealers should follow standard claim and forward claim procedures within thirty (30) days, of any part failure or malfunction believed to be a warranty claim.

2. No returned part will be accepted unless they are transportation prepaid and accompanied by the packing list, copy of the returned goods authorization form, or the packing list copy of the warranty claim form.

3. Parts returned should have a tag attached with sender's name and address clearly printed.

DISCLAIMER

This supplement contains additional information that is specific to units. It is used in conjunction with the basic machine operator's manual which includes safety and operational information.

Retain all manuals for future reference. Read all and understand all manuals in their entirety before operation or service.

The information contained in this manual is subject to change without notice.

Coster Engineering shall not be liable for technical or editorial omissions made herein; nor for incidental or consequential damages resulting from the furnishing, performance, or use of this material.

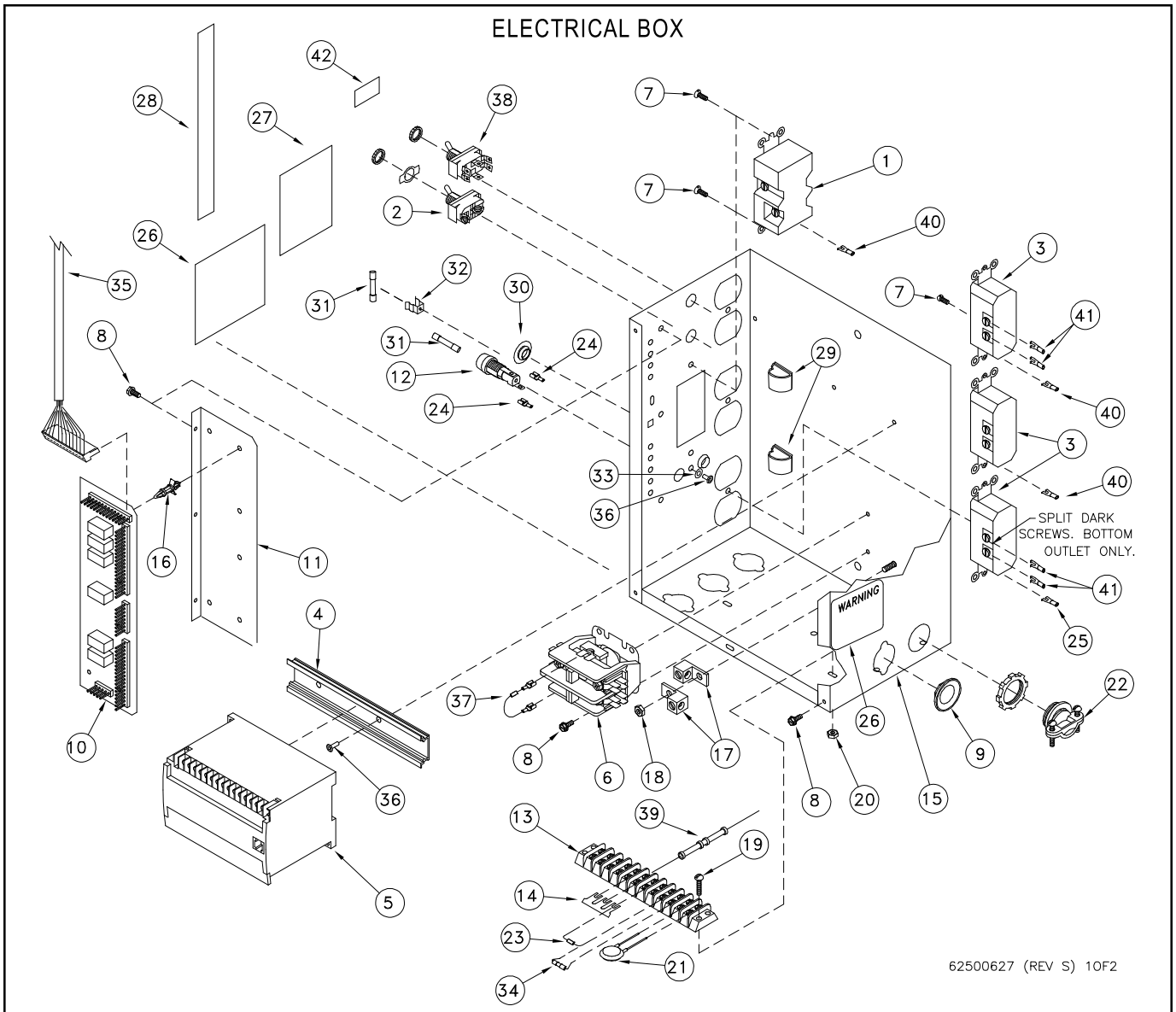

REF. NO.	PART NUMBER	DESCRIPTION	QTY.	REF. NO.	PART NUMBER	DESCRIPTION	QTY.
1	625-004-068	Reciptical, 125 15 AMP	1	23*	62501684	Suppressor, TVS	1
2	N/A	N/A	N/A		62501414	Kit Includes Items 23 & 34	
3	625-004-252	Receptical, 15 AMP 110 BRN GRD	3	24	62500631	Terminal, 3/16 F SDRL 22/18	2
4	625-900-334	Bin Rail, Electrical Box	1	25	62502962	Terminal, Spade #10	1
5**	62501824	Kit, PLC With Fuse, TVS	1	26	62502954	Decal, Warning Electrocution	2
6	N/A	N/A	N/A	27	62500632	Decal, Fuse-Pump	1
7	950-004-024	Mach-Scr #6-32x3/8 SL Pan HD	5	28	62500633	Decal, CB Led Display	1
8	950-005-006	S-Tap Scr #8-36x3/8 SHW HD	7	29	62500156	Clamp, 3/4 Self Adhesive	2
9	625-004-073	Seal, Knockout 3/4 Steel	1	30	625-004-189	Plug, BPF-1/2 BLK Plastic	1
10**	36120000	Circuit Board, Vend	1	31*	62500634	Fuse, 5A 3AG 250V Fast Acting	2
11	62500612	Brk, Board Mount	1	32	62500635	Fuse, Metal Clip 3AG	1
12	39207034	Fuse Holder, 3AG 1/4" Q-Conn.	1	33	952-004-068	Washer, .2 x .44 SS	1
13	625-001-265	Term Block, 12 Pole, High Barrir	1	34*	62501400	Fuse, 1A 2AG Fast	1
14	625-004-051	Jumper, Snap Off Strip Style	3	35	62500611	Harness, Wire ECB/PLC	1
15	62500624	Weldment, CB Electrical Box	1	36	954-002-010	Rivet 1/8 x 1/8 SS	3
16	39200010	Standoff, Circuit Board	6	37	N/A	N/A	N/A
17	625-001-266	Term Block, GND Lug AL 4-14 Wire	2	38	N/A	N/A	N/A
18	951-001-002	Nut-Hex #10-24	1	39	N/A	N/A	N/A
19	950-004-086	Mach-Screw #8-32 x 5/8 PH PN HD	2	40	62502964	Spade, #10 Yellow	3
20	951-001-012	Nut-Hex #8-32	2	41	62502953	Spade, #10 22-18 Ga.	4
21	39207032	Varistor, Surge Absorber 6500A	1	42	62502944	Label Upper Outlet	1
22	625-001-312	Fitting Elec, Romex Connect 3/4	1				

* Recommended Spare Parts ** Additional Recommended Spare Parts

ELECTRICAL SECTION

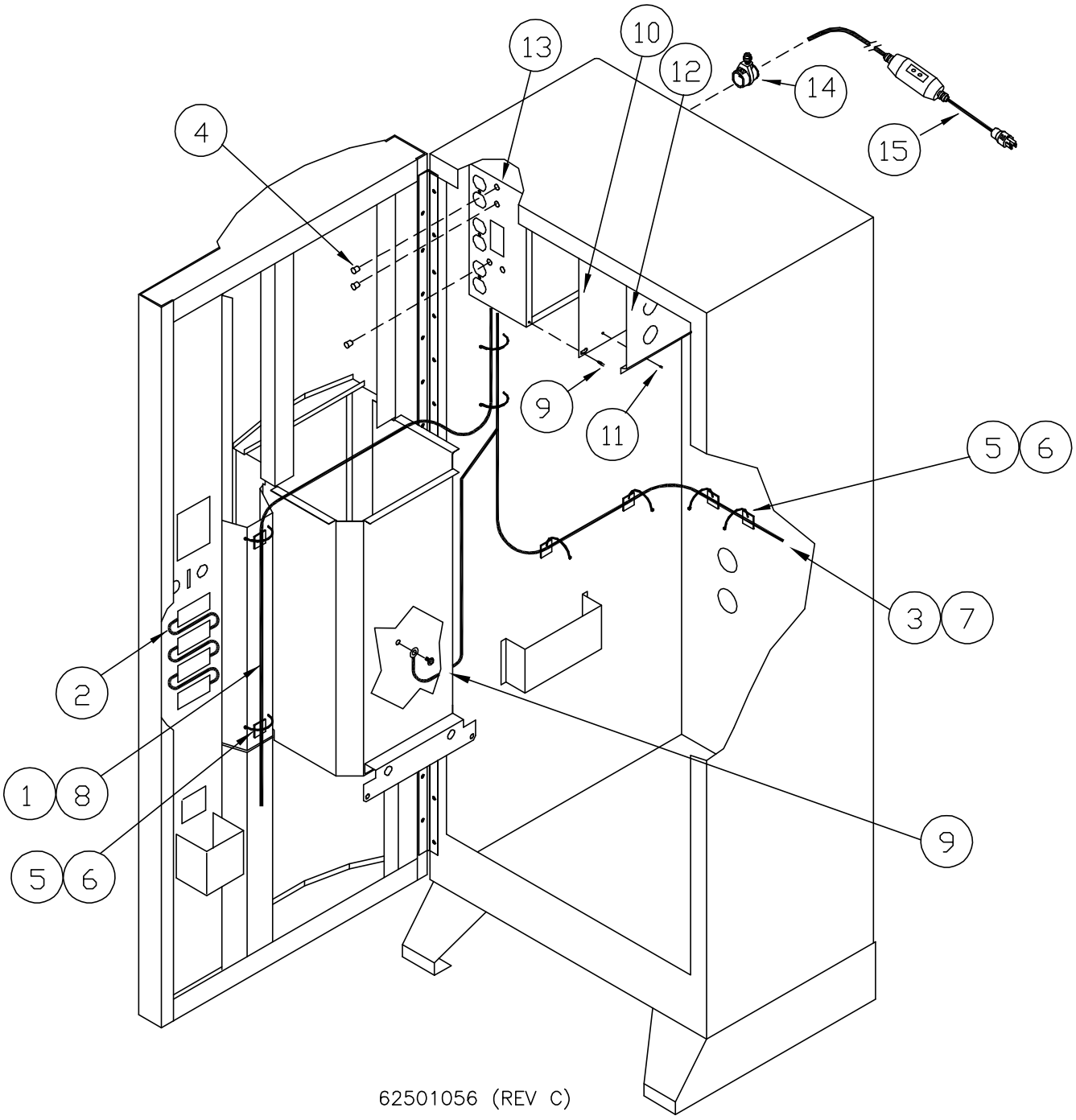

62501056 (REV C)

REF. NO.	PART NUMBER	DESCRIPTION	QTY.	REF. NO.	PART NUMBER	DESCRIPTION	QTY.
1	62500697	24V 4-Sel Wire Harness	1	9	950-005-006	#8 Self Tapping Screw	4
2	62500868	Jumper Wire	3	10	625-900-333	Cover Electrical Box	1
3	62501052	120V Wire Harness	1	11	954-002-010	1/8” Pop Rivet	4
4	625-004-189	Plug 1/2 Black Plastic	3	12	625-900-774	Bracket Literature	1
5	625-001-469	Wire Tie	12	13	62500627	Electrical Box Assembly	1
6	625-002-305	BASE WIRE TIE	6	14	62500498	Strain Relief	1
7	N/A	N/A	N/A	15	62502175	GFCI Inline Corded Plug	1
8	N/A	N/A	N/A				

* Recommended Spare Parts ** Additional Recommended Spare Parts

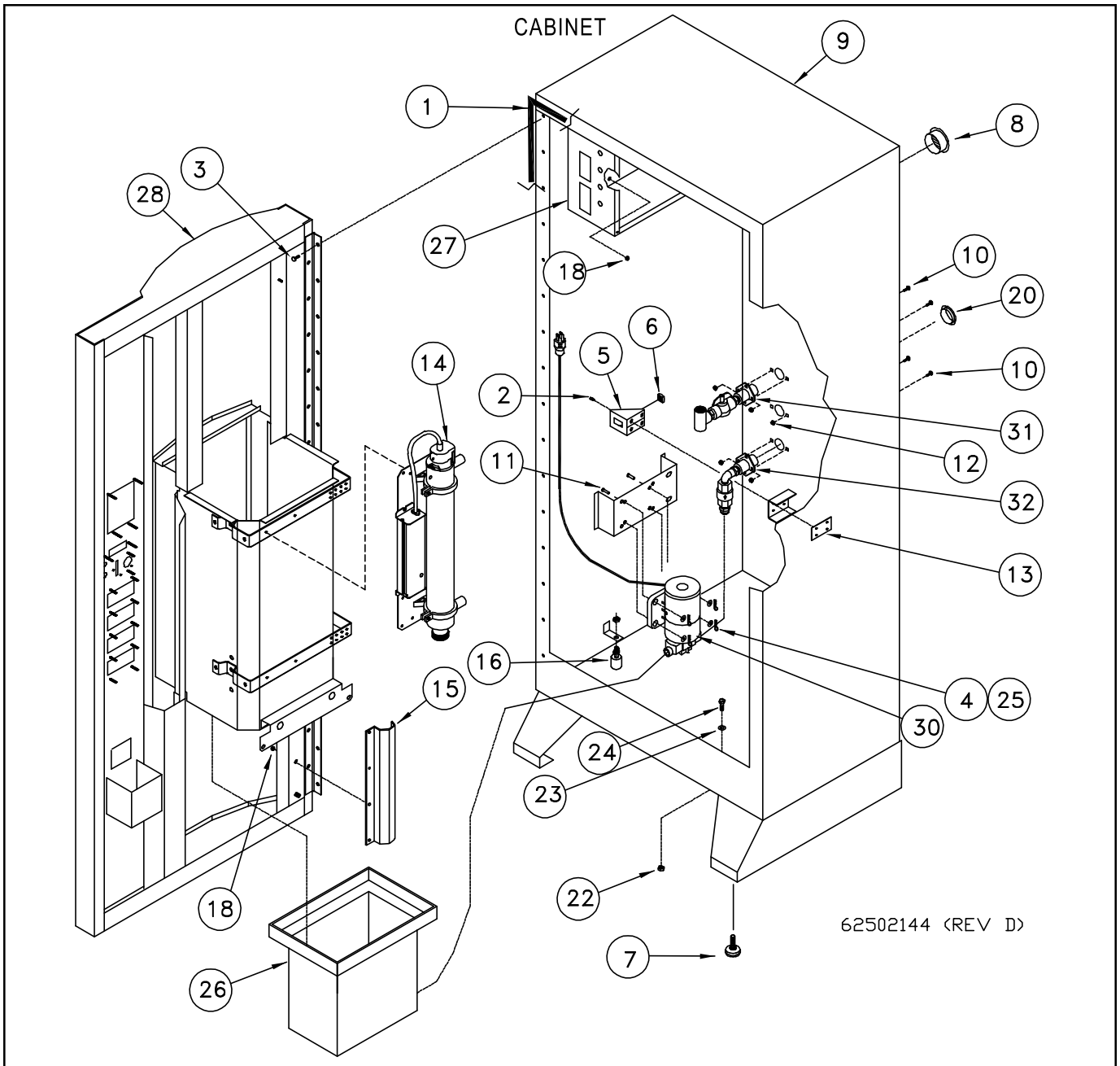

REF. NO.	PART NUMBER	DESCRIPTION	QTY.	REF. NO.	PART NUMBER	DESCRIPTION	QTY.
1	921-001-041	Weather Strip 5/8 x 3/8	16	17	N/A	N/A	N/A
2	060905	Self Tapping Screw #10-24 x 1/2 SHW Head	4	18	951-002-001	Flanged Whiz Lock Nut 1/4-20	4
3	954-002-007	Rivot-Pop, 1/4 x 1/4 SS OEDH	16	19	N/A	N/A	N/A
4	953-005-004	Cotter Pin	4	20	625-004-325	Plug, 1 1/8 Plastic	1
5	625-001-070	Vend Part, Bracket	1	21	N/A	N/A	N/A
6	625-001-075	Vending Part, Nut 1/2-13	1	22	061910	Nut 3/8-16 SS	2
7	625-001-950	Leg, 3/8-16 Rubber Leveler	4	23	625-001-509	O-Ring	2
8	625-001-965	Vent, 2” Dia Aluminum Louvered	4	24	031-09103	Hex Head Cap Screw 3/8 x 3/4 SS	2
9	62501310	Cabinet, Weldment Full Size	1	25	952-004-068	#10 Washer SS	4
9	62500824	Cabinet, Weldment In Isle	1	26	62500595	CB Drain Bucket	1
10	950-003-071	Carriage Bolt #10 x 1/2 SS	6	27	62500627	Electrical Box Assembly	1
11	953-002-050	Clevis Pin, 3/16 x 1	4	28	62502101	Door Weldment	1
12	951-002-012	Hex Nut #10-24 Whiz Lock	6	29	N/A	N/A	N/A
13	625-901-099	Plate, Door Latch	1	30	625-900-510	Assembly, Drain Pump	1
14	62500859	U.V. Assembly	1	31	N/A	N/A	N/A
15	62501092	Bracket, Door Stop	1	32	62501965	Assembly, Drain Line	1
16*	625-001-325	Level Switch, N/C Float & Stem	1				

* Recommended Spare Parts ** Additional Recommended Spare Parts

DOOR, WIDE DISPENSER VMC

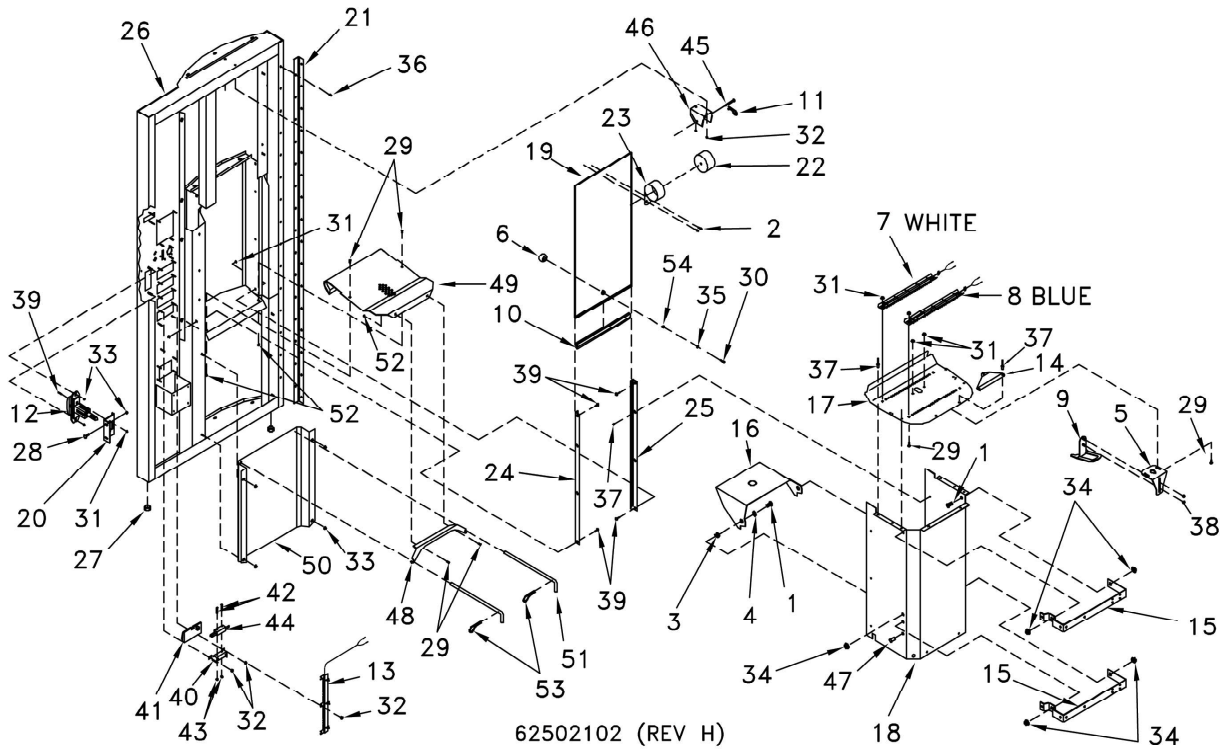

REF. NO.	PART NUMBER	DESCRIPTION	QTY.	REF. NO.	PART NUMBER	DESCRIPTION	QTY.
1	950-011-063	Button Head Screw 3/8-16 x 3/4 SS	6	28	950-003-065	Carriage Bolt 1/4-20 x 5/8 Gr. 5	2
2	950-005-031	Self Tap Screw #6 x 1/4 Type B	2	29	950-003-071	Carriage Bolt #10-24 x 1/2 SS	10
3	061910	Hex Nut 3/8-16 SS	4	30	950-004-121	Socket Head Cap Screw 1/4- SS	1
4	061916	3/8 Flat Washer SS	2	31	951-002-012	Hex Nut #10-24 Whiz Lock	12
5	62501122	Bracket, Upper Guide	1	32	951-001-012	Nut-Hex #8-32	15
6	62503137	Knob, Black Plastic	1	33	951-002-001	Flanged Whiz Lock Nut 1/4-20	8
7	62502152	Sec. LED White Light	1	34	951-002-003	Lock Nut 2 Hex Whiz 3/8-16	6
8	62502154	Sec. LED Blue Light	1	35	952-004-086	Flat Washer 9/32 x 1	2
9	62501121	Bracket, Lower Guide	1	36	954-002-007	Rivet-Pop 1/4 x 1/4 S-S Oedh	15
10**	625-004-053	Trim,Edge Guard 3/16”	1.1	37	954-002-013	Pop Rivet 3/16X1/4 Closed End Sl	12
11	953-005-004	Cotter Pin	1	38	061605	Nut 1/4-20 SS Nylon Lock	2
12	625-005-166	T-Handle Lock Flush Mount	1	39	950-003-081	Bolt #10 x 3/4 CRG SS	6
13	62502153	Sec. LED Button Light	1	40	62500618	Bracket, Rect. Button Mount	5
14	62502100	Bracket, Water Meter	1	41*	62500617	Rectangular Push Button	4
15	625-900-300	Bracket,UV Light	2	42	700-10904	Machine Screw #6-32 x 1 Slotted Pan Head	8
16	625-900-303	Shelf,Dispenser	1	43	951-001-001	Hex Nut #6-32	8
17	62502099	Panel, Led Dispenser	1	44*	62500615	Switch, Spst, Cherry Micro	4
18	62500878	Housing, S.S., Wide Dispenser	1	45	953-002-039	Clevis Pin, 3/16 X 1-3/4	1
19**	62500883	Door, Wide Dispenser	1	46	62500884	Bracket, Spring Drum	1
20	625-900-957	Bracket, Door Lock Retainer	1	47	62500922	Plug, 3/8 Locking Hole, Black Plastic	2
21	625-901-100	Hinge, Vending Door	1	48	62500140	Bracket, Drain Bucket	1
22	62500886	Drum, C.F. Spring	1	49	62500872	Drain Pan Wide	1
23**	62500885	Spring, 2 Lb Constant Force	1	50	62500185	Shield Lower	1
24	62500890	Track R.H., Wide Disp	1	51	62500349	Pin Drain Bucket	2
25	62500889	Track L.H. Wide Disp	1	52	951-001-002	Nut #10-24 SS	4
26	62502101	Weldment, VMC Door 4 Sel.	1	53	060854	Cotter Pin 1/8 x 3/4	2
27	62500347	Vent 7/8 Dia Plastic	2	54	951-005-104	Jam Nut 5/16-18 SS	1

* Recommended Spare Parts ** Additional Recommended Spare Parts

DOOR, TRIM WIDE DISPENSER

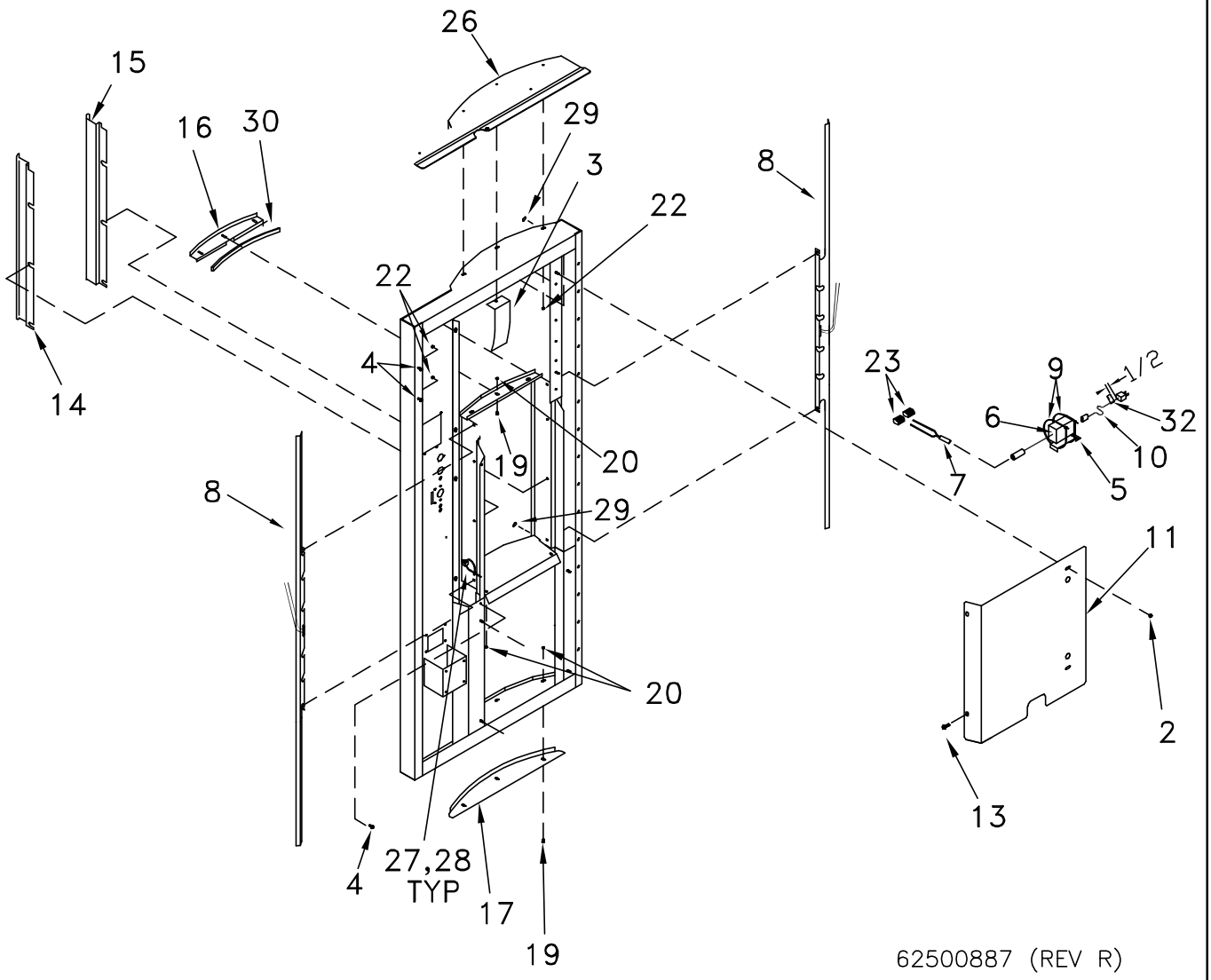

REF. NO.	PART NUMBER	DESCRIPTION	QTY.	REF. NO.	PART NUMBER	DESCRIPTION	QTY.
1	N/A	N/A	N/A	17	62500321	Weld End Cap	1
2	951-002-001	Whiz Nut 1/4-20	8	18	N/A	N/A	N/A
3	62501139	Bracket, Wide Disp Door Guide	1	19	950-003-071	Carriage Bolt #10-24 x 1/2 SS	6
4	392-010-028	Self-Tap Screw #8-18 x 1/2 Shw Head	3	20	951-001-002	Hex Nut #10-24 SS	6
5	62502951	Bracket, Power Supply	1	21	N/A	N/A	N/A
6	62502950	Power Supply, LED Lights	1	22	951-001-012	Hex Nut #8-32	7
7	62502151	Cable,Power Supply Pigtail	1	23	62502986	Connector, Lever Nut	2
8	62502149	LED Strip Light Assembly	2	24	N/A	N/A	N/A
9	367-001-011	Cable Tie, 14”	1	25	N/A	N/A	N/A
10	62502949	Power Cord, 5 Ft.	1	26	62501333	Wld, Top Door Cover	1
11	62502604	Shield, Upper Curved Door	1	27	625-001-469	Tywrap, 1/6-5/8 Dia 5L	18
12	N/A	N/A	N/A	28	62501582	Wire Tie Down, Push In 1/4”	8
13	950-005-004	Self Tapping Screw 1/4-20 x 1/2	2	29	62501362	Felt, Disc 1/2 x 1/16 Self Stick	12
14	62500869	Trim L.H., Wide Disp.	1	30	921-001-507	Weather Strip, 3/8 x 1/4 D	1
15	62500870	Trim R.H., Wide Disp	1	31	625-002-305	Adhesive Wire Tie Down	1
16	62501740	Trim, Top, Wide Disp.	1	32	62502931	Label, LED Cord	1

* Recommended Spare Parts ** Additional Recommended Spare Parts

DOOR, COIN MECHANISM ACCESSORIES

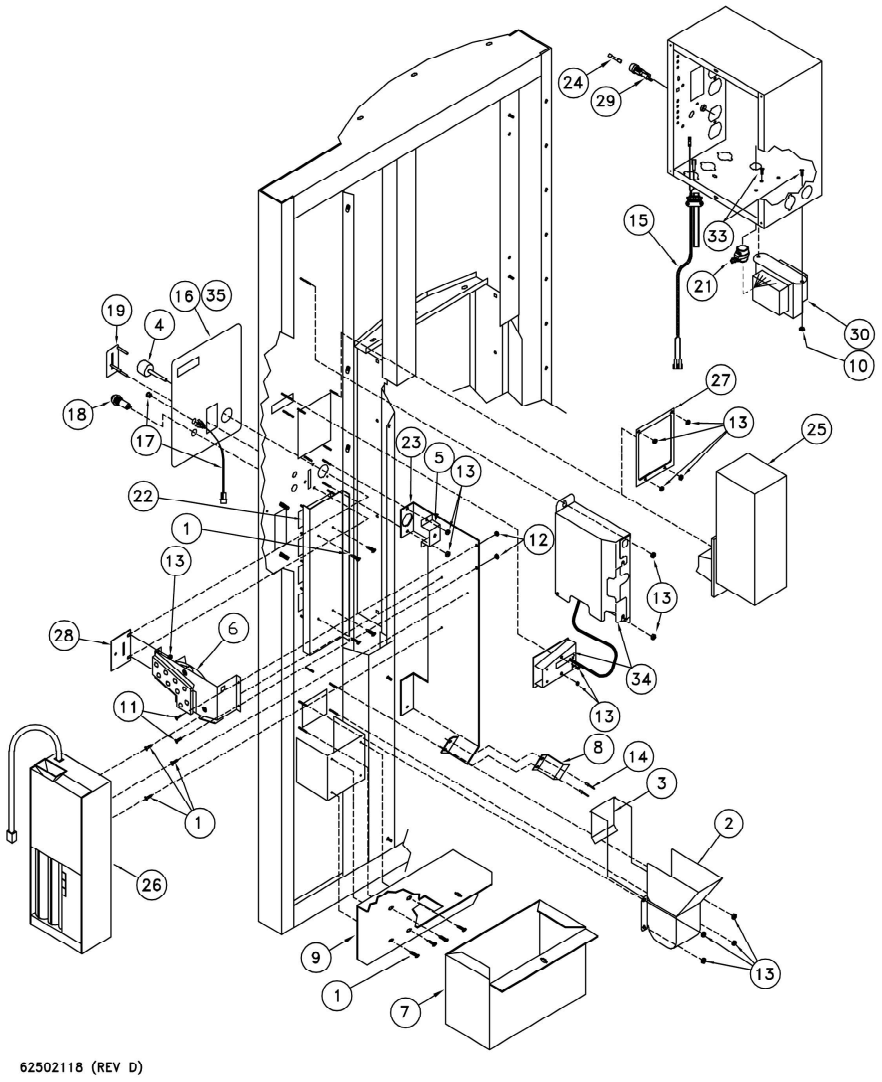

REF. NO.	PART NUMBER	DESCRIPTION	QTY.	REF. NO.	PART NUMBER	DESCRIPTION	QTY.
1	392-010-028	Self Tap Screw #8-18 x 1/2 Shw Head	11	18	62502009	Switch, Spst Red	1
2	62501484	Coin Return, SS (Includes Item 3)	1	19	62500647	Coin Slot Guard	1
3	625-004-766	Coin Return Door SS	1	20	62501931	Bracket Cash Box, In Isle Cabinet	1
4	625-004-768	Button, Coin Return	1	21	62500498	Strain Relief	1
5	625-004-769	Coin Return Bracket Support	1	22	62500652	Guard, Coin Mech.	1
6	62501280	Bracket Assembly Coin Return	1	23	62500653	Bracket, Coin Mech.	1
7	625-900-777	Wld, Large Cash Box	1	24	62500634	Fuse 5A 3Ag	1
8	625-900-900	Chute, Coin	1	25*	62501893	Feature List, Bill Validator	0
9	625-900-936	Bracket Cash Box, Full Size Cabinet	1	26*	62501892	Feature List, Coin Mech	0
10	951-003-011	Hex Lock Nut 8-32	2	27	62500666	Cover, $ Bill Hole	1
11	950-004-024	Mach Screw, #6 x 3/8 Sl Pan Head	2	28	625-901-091	Coin Slot, SS	1
12	951-001-001	Hex Nut 6-32	2	29	39207034	Fuse Holder	1
13	951-001-012	Hex Nut #8-32	18	30	62503149	Transformer, Control 75Va	1
14	954-002-010	Pop Rivet 1/8 x 1/8 SS OEDH	2	31	62500631	Terminal, 3/16 Sdrl	1
15	62502093	Harness, Coin 1840 VMC	1	32	62500691	Terminal, 1/4M 22-18	1
16	62502673	Decal, Instruction Coin VMC 1840	1	33	950-004-032	#8-32 x 1/2 Sl Pan Head	2
17	62500642	Light, Red Led	1	34	62502119	1840 VMC Coin Board Assembly (See Page 42)	1

* Recommended Spare Parts ** Additional Recommended Spare Parts

VENDING MACHINE CONTROLLER

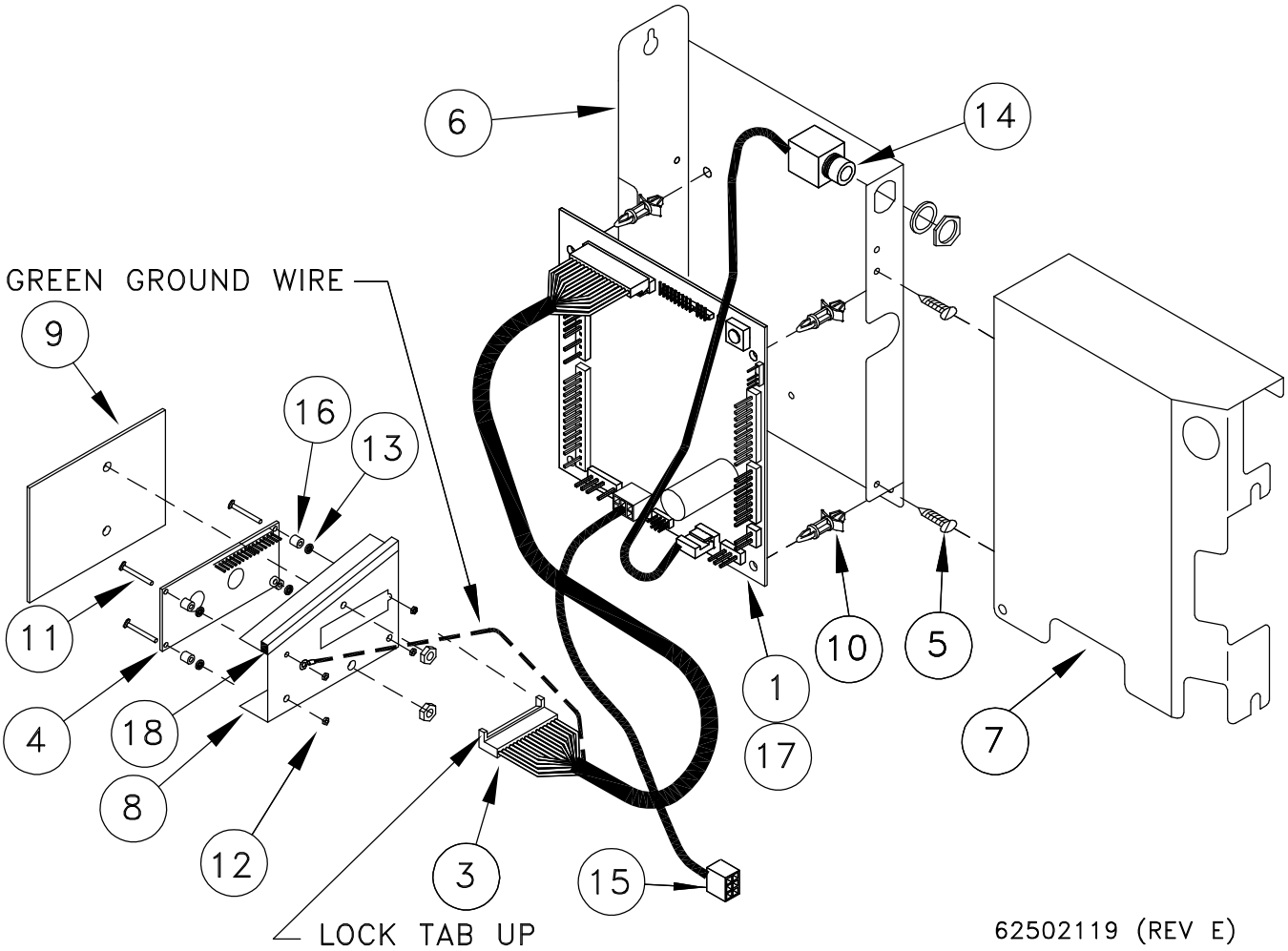

REF. NO.	PART NUMBER	DESCRIPTION	QTY.	REF. NO.	PART NUMBER	DESCRIPTION	QTY.
1**	62502004	VCM, Includes Item 2, 3 & 4	1	10	39200014	Standoff, Circuit Board 1/4	4
2	62502678	VCM, Circuit Board Only	1	11	950-004-116	Machine Screw, #2-56 x 5/8 SS	4
3	62502006	Connector Cord, Only	1	12	951-001-033	Nut, Hex #2-56 SS	4
4	62502672	Display Only	1	13	62502203	Retainer, Nylon #2	4
5	392-010-028	Self Tap Screw #8-32 x 1/2 SHWHD	2	14	62502120	Harness, Dex Cable (Optional)	1
6	62502095	Bracket, Cb Mt. 1840	1	15	62502131	Harness, MDB 12” Extender	1
7	62502094	Bracket, Cb Cover 1840	1	16	62502200	Bushing, Nylon Spacer	4
8	62502676	Bracket Display	1	17	62502678	VMC (Inc 2 & 3)	1
9	62502675	Window, Clear UV Filter	1	18	62500458	Foam Strip 1/8 x 1/4	3

* Recommended Spare Parts ** Additional Recommended Spare Parts

DOOR, NON-COIN MECHANISM ACCESSORIES

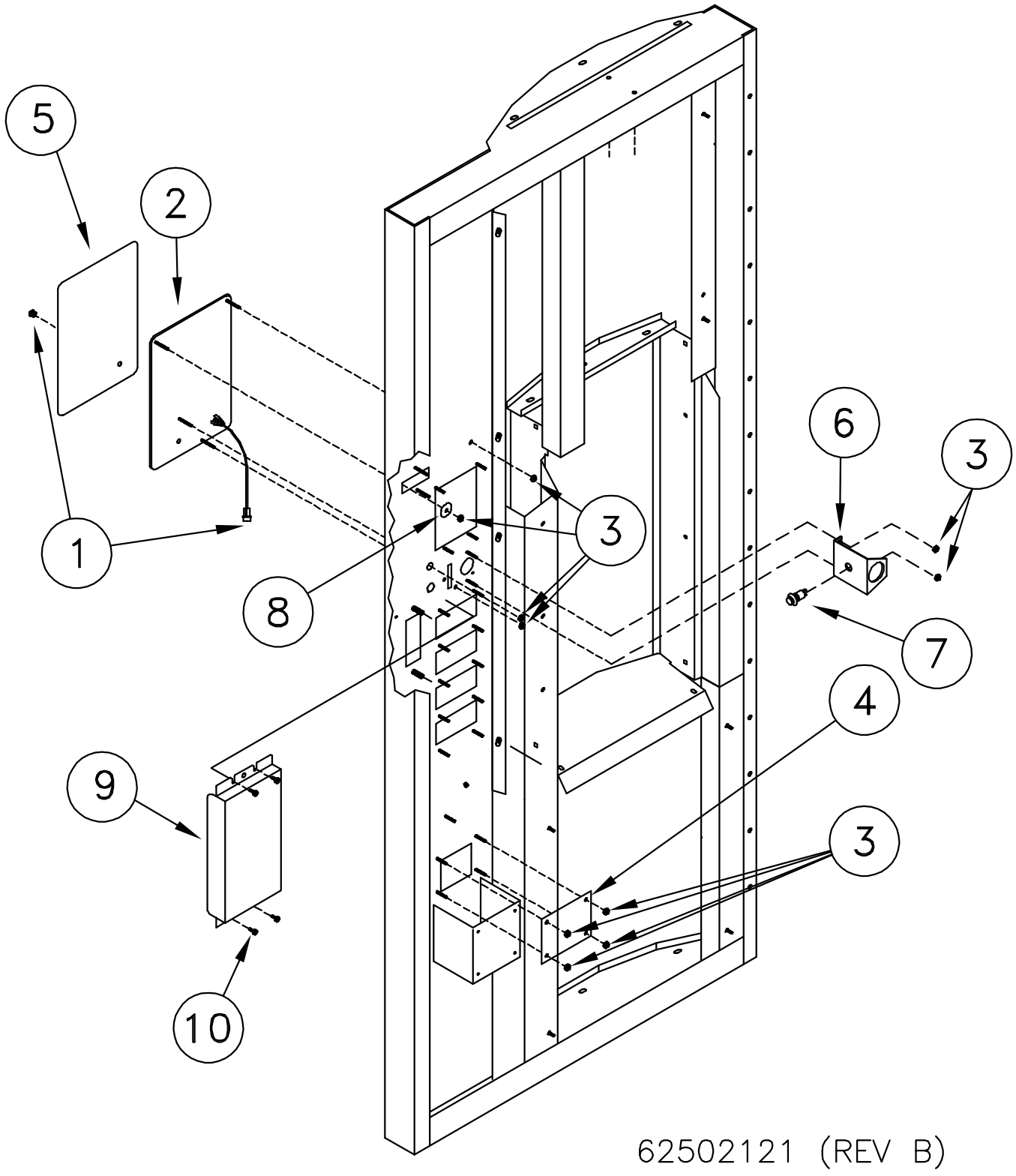

REF. NO.	PART NUMBER	DESCRIPTION	QTY.	REF. NO.	PART NUMBER	DESCRIPTION	QTY.
1	62500642	Assembly, Service Light	1	6	62500686	Bracket, Button	1
2	62502097	Cover Plate, Non-Coin VMC Door	1	7	62502009	Switch, SPST Red Push Button	1
3	951-001-012	Hex Nut #8-32	10	8	952-004-066	Washer, .28 ID x 1.25 OD	1
4	62500636	Cover Plate, Coin Return	1	9	62502948	Cover, Push Button	1
5	62502110	Decal, Instructions, 4 Select, N-C, Di	1	10	392-010-028	#8 x 1/2 Self Tapping Screw	4

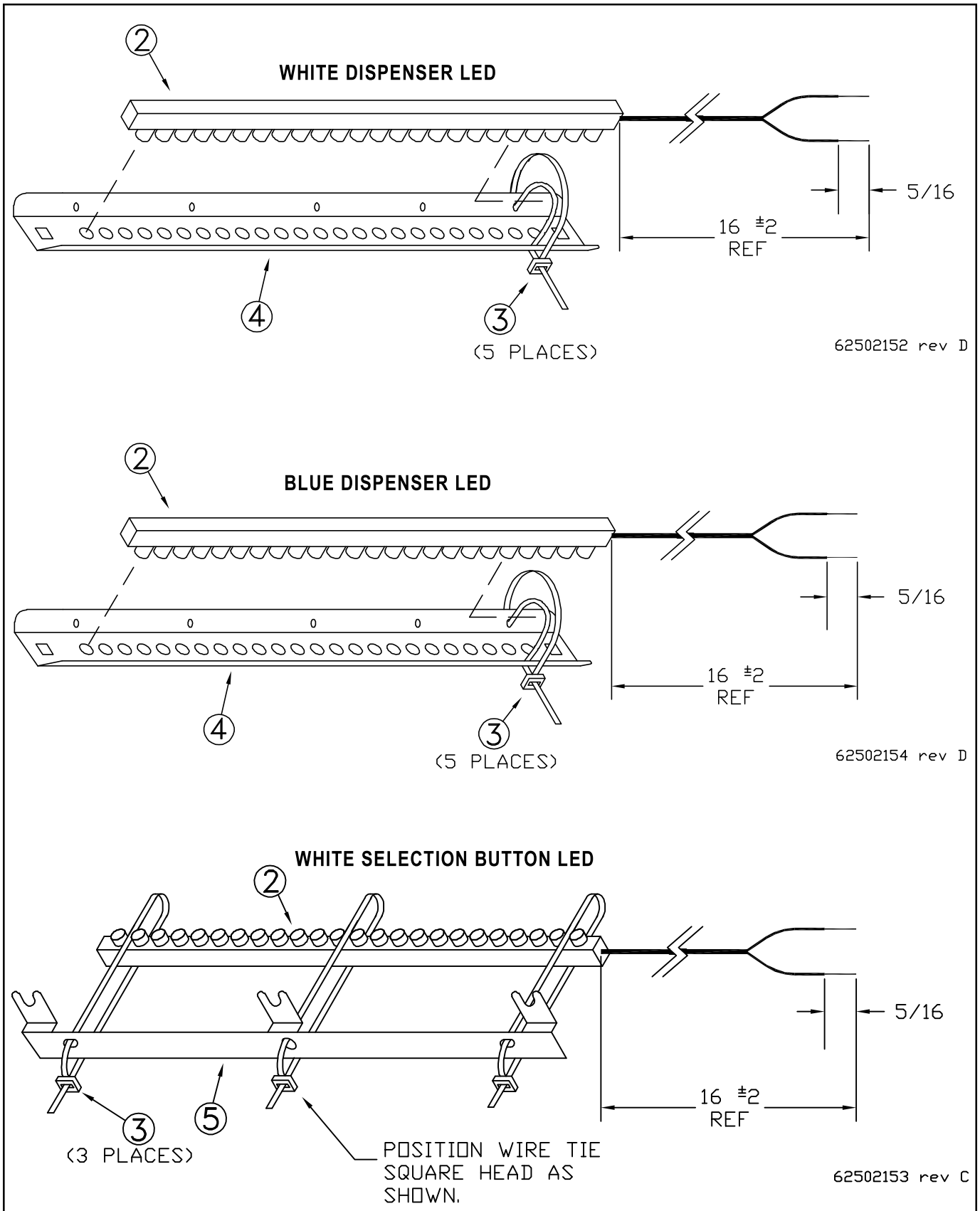

REF. NO.	PART NUMBER	DESCRIPTION	QTY.	REF. NO.	PART NUMBER	DESCRIPTION	QTY.
1	N/A	N/A	N/A	3	625-001-469	TS Wrap, Nylon	5
2	62502071	Blue LED Strip 9.5 “	1	4	62502073	Bracket, Dispenser Light LED	1
2	62502070	White LED Strip 9.5”	2	5	62502072	Bracket, Selection Button LED	1

DRAIN TANK ASSEMBLY

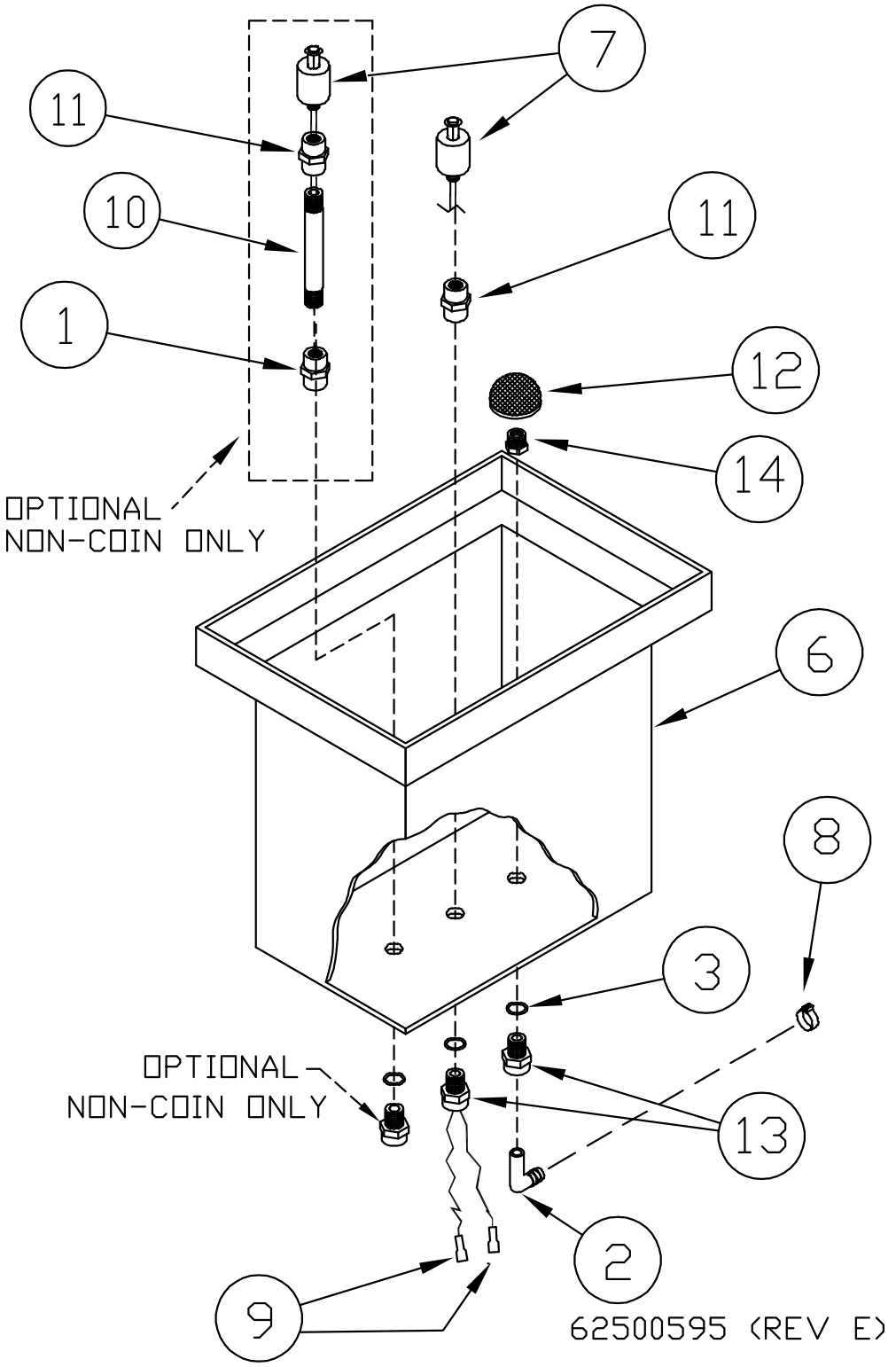

REF. NO.	PART NUMBER	DESCRIPTION	QTY.	REF. NO.	PART NUMBER	DESCRIPTION	QTY.
1	62502747	Fitting, NYLON 1/4 F x 1/4 F	1	8	625-002-875	Hose, Clamp .69 - .59 OD Plastic	1
2	625-005-998	Fitting, 3/8 Stem x 3/8 Barb	1	9	62500691	Terminal, 1/4 M 22-18 Full INS	2
3	625-001-500	O-Ring, 014 70HD Buna-N	2	10	625-001-811	Fitting, PVC SCH 80, Nipple 1/2 x 4	1
4	N/A	N/A	N/A	11	62502748	Fitting, Nylon 1/4 F x 1/8 F	1
5	N/A	N/A	N/A	12	62500984	Strainer	1
6	625-001-121	Tank, Drain 2 Gal (W/O Holes)	1	13	62500493	Fitting, 3/8 Tee x 1/4 MNPT	2
7*	625-001-325	Level Switch, NC	1	14	62500578	Fitting, 3/8 x 1 1/4 RB	1

* Recommended Spare Parts ** Additional Recommended Spare Parts

DRAIN PLUMBING

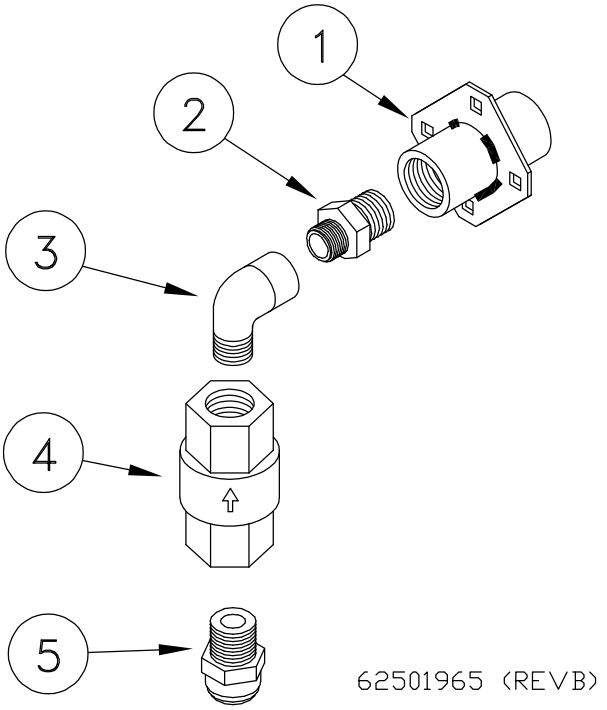

REF. NO.	PART NUMBER	DESCRIPTION	QTY.	REF. NO.	PART NUMBER	DESCRIPTION	QTY.
1	62502608	Ftg, 1/2 Bulkhead 1/2 x 1/2	1	4	62501963	Valve, Check 3/8 FNPT Poly	1
2	62501020	Ftg, Nylon Nipple 3/8 x 1/2	1	5	625-005-949	Ftg, 3/8T x 3/8 MNPT JG	1
3	62501964	Ftg, Nylon 3/8 Street Elbow	1				

AQUATEC DRAIN PUMP REPAIR PARTS/REBUILD KITS

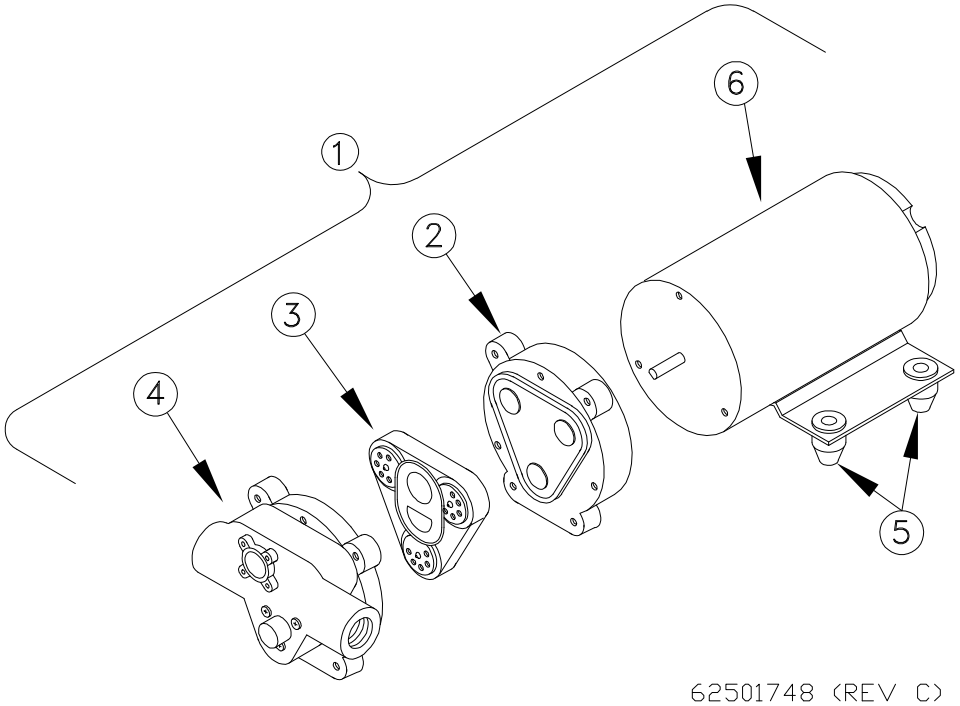

REF. NO.	PART NUMBER	DESCRIPTION	QTY.	REF. NO.	PART NUMBER	DESCRIPTION	QTY.
1	62501748	Pump Assembly	1	4	62501761	Kit, Pump Housing Aquatec 5884	1
2	62501763	Kit, Cam Bearing, Aquatec 5884	1	5	62501770	Grommet Isolator (Kit, 4 Pieces)	1
3	62501762	Kit, Check Valve, Aquatec 5884	1	6	62501850	Motor, Electric	1

U.V. ASSEMBLY, R-CAN ICE

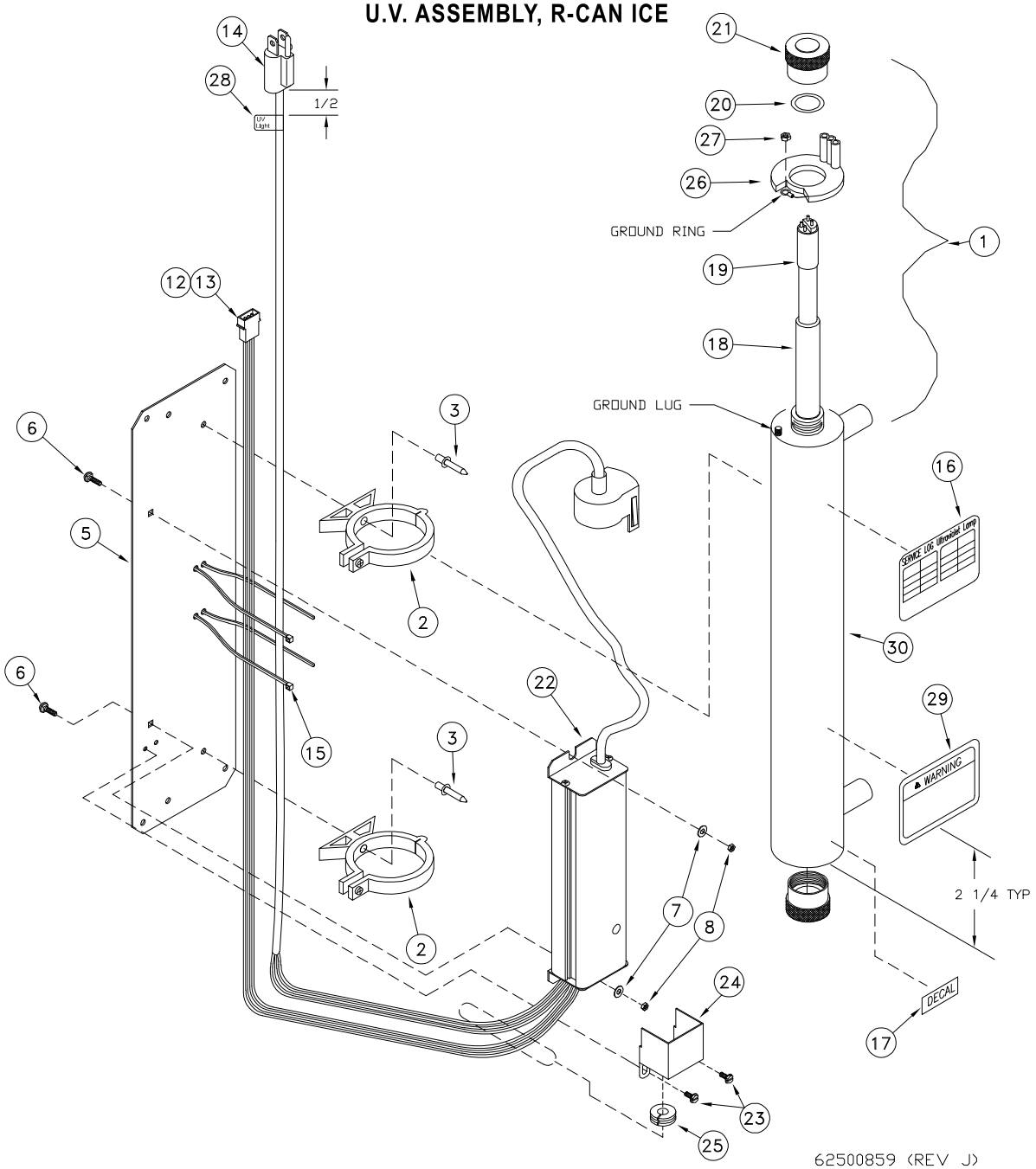

REF. NO.	PART NUMBER	DESCRIPTION	QTY.	REF. NO.	PART NUMBER	DESCRIPTION	QTY.
1	62502822	Light, U.V. (Includes Items 16, 17, 22 & 29)	1	16	62502938	Decal, Service Log	1
2	N/A	Clip Included W/Item 1	2	17	62500940	Decal, Bulb Replacement	1
3	954-002-003	Pop Rivet 3/16 x 3/8 Stain OEDH	2	18*	62500855	Sleeve, Quartz UV QS-463	1
4	N/A	N/A	N/A	19*	62500854	Light, UV S463RL R-Can	1
5	625-901-072	Bracket 5 GPM Trojan Mount	1	20	62500853	O-Ring, 5 GPM UV OR-212	2
6	950-003-071	Carriage Bolt #10-24 x 1/2 SS	2	21	62500857	Nut, UV AL Gland RN-001	2
7	952-004-062	Washer, 1/4 SS	2	22*	62500856	Ballast Electronic BA-ICE-VI	1
8	951-001-002	Hex Nut #10-24 SS	2	23	061034	Self Tap Screw, 6-32 x 3/16	2
9	625-004-026	Wire Blue	2	24	62501719	Elec Cover, UV Light	1
10	625-004-172	Wire Black	2	25	62501720	Grommet, Rubber 3/5 x 5/8	1
11	625-004-028	Wire Red	2	26		Included With Item 1	1
12	62500641	Pin, 24-18 Awg Mate-N-Lok	3	27		Included With Item 1	1
13	62500682	Housing, 3 Pin Mate-N-Lok	1	28	62502930	Label, U.V Cord	1
14	62500690	Plug, W/18-3 SJT 110 V 59” Cord	1	29	62502939	Decal, Warning (Included With Item 1)	1
15	625-001-469	Tywrap, 1/6-5/8 Dia. 5 L	2	30	62503053	Canister, (Includes Items 16 & 29)	1

* Recommended Spare Parts ** Additional Recommended Spare Parts

DISPENSER/FEED PLUMBING, IN ISLE CABINET

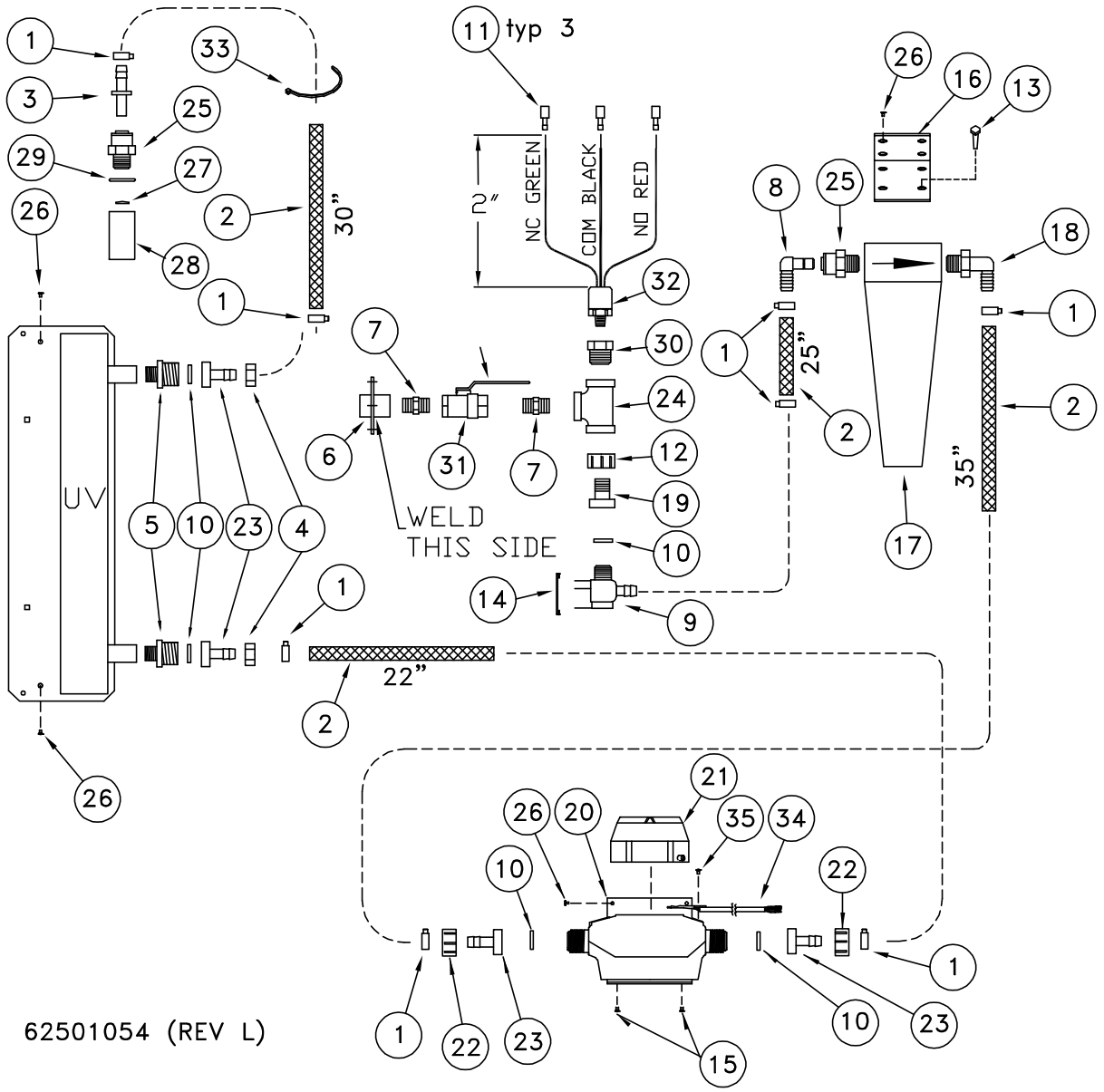

REF. NO.	PART NUMBER	DESCRIPTION	QTY.	REF. NO.	PART NUMBER	DESCRIPTION	QTY.
1	625-002-881	Hose Clamp, .76 x .89	8	19	62501814	Fitting, Nylon 1/2m Swivel	1
2	625-001-929	1/2 Dia. PVC Braid Hose	9.3	20	62501055	Bracket, Water Meter	1
3	62500522	Fitting, 1/2 Stem x 1/2 Barb, JG	1	21	62500658	Flow Meter, Gallons	1
4	62500443	Fitting, Nylon Nut 3/4 GHT	2	21	62500790	Water Meter Metric (Optional)	1
5	62501793	Fitting, Nylon 3/8 M x 3/4 GHT	2	22	625-002-955	Fitting, Swivel Hex Nut Black 3/4 FPS	2
6	62502608	Fitting, 1/2 Bulkhead	1	23	62500423	Barb-Swivel, 1/2 H	4
7	62501169	Fitting, Nylon 1/2 Nipple	2	24	62502606	Fitting, 1/2 Tee SS	1
8	625-005-993	Fitting, 1/2 Stem x 1/2 Barb 90°	1	25	625-001-672	Fitting, 1/2m x 1/2 T, JG	2
9	62501392	Solenoid Valve, 5 GPM	1	26	950-005-006	Self Tapping #8-32 x 3/8 Hex Head	8
10	625-004-467	Washer, GHT White Rubber	5	27	62501815	Screen 1/2" Nozzle	1
11	62500691	Terminal, 1/4 M	3	28	62501818	Nozzle W/Screen 1/2"	1
12	62501459	Nut Assembly W/Clamp	1	29	39212011	Seal Ring 1/2"	1
13	950-005-020	Self Tapping 10-3/4 Hex	4	30	62502716	Fitting, SS, 1/2 x 1/4 RB	1
14	62500675	Surge Suppressor	1	31	62502596	Valve, Ball 1/2 Brass LF	1
15	950-005-027	Self Tapping Screw 8 x 3/8 Hex Head Type A	4	32	62502593	Press Sw SPDT	1
16	625-900-941	Bracket, Filter	1	33	625-001-469	Tywrap 1/16 Nylon	1
17	62501813	Filter Housing, 1/2"	1	34	62500661	Assembly, Water Meter Sensor	1
18	62500421	Fitting, Nylon 1/2 M x 1/2 Barb	1	35	392-010-019	Self Tapping Screw #6-20 x 3/8 Phillips Pan Head	2

* Recommended Spare Parts ** Additional Recommended Spare Parts

DISPENSER/FEED PLUMBING, FULL SIZE CABINET

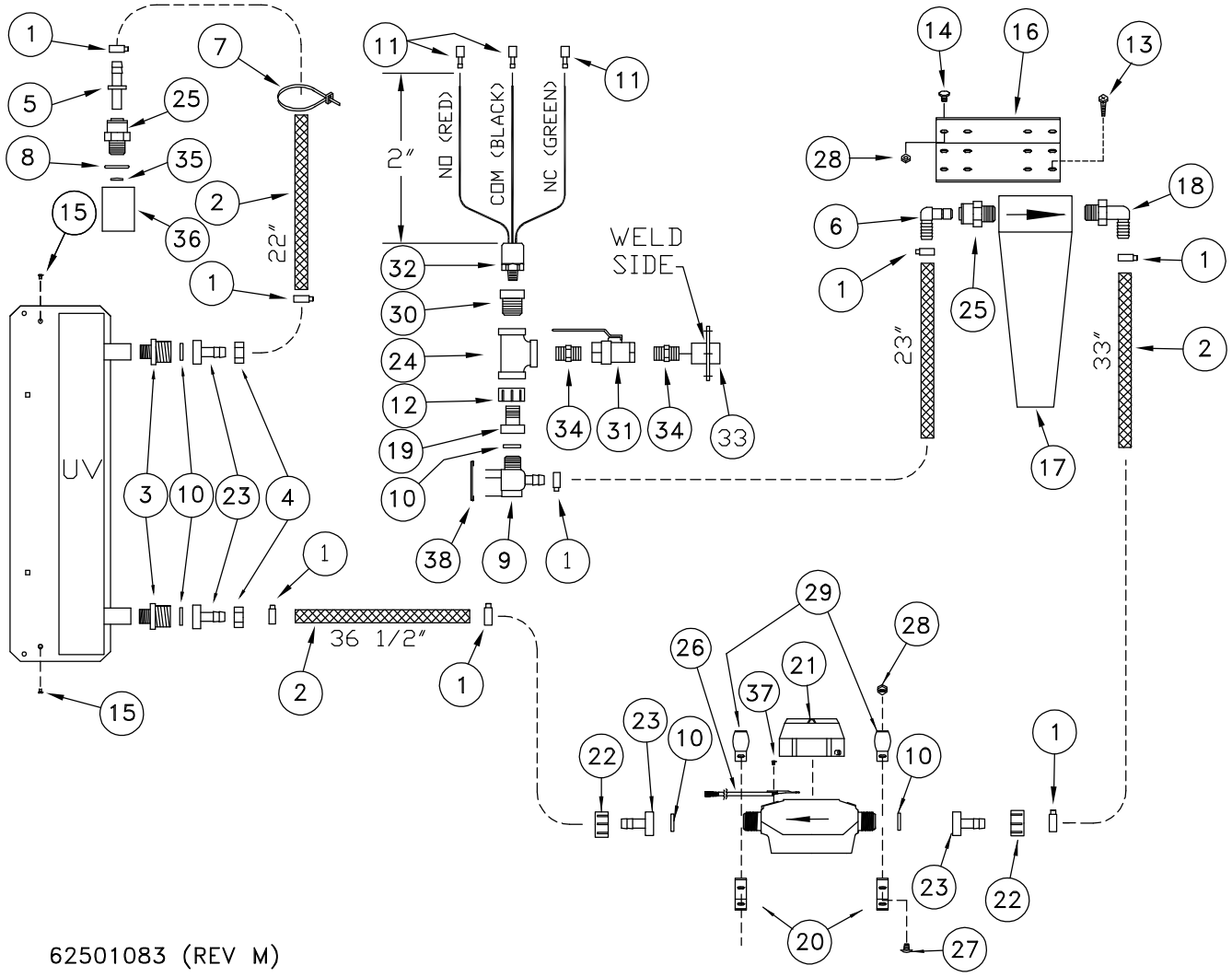

REF. NO.	PART NUMBER	DESCRIPTION	QTY.	REF. NO.	PART NUMBER	DESCRIPTION	QTY.
1	625-002-881	Hose Clamp, .76 x .89	6	21	62500658	Flow Meter, Gallons	1
2	625-001-929	1/2 Dia. PVC Braided. Hose	8.2	21	62500790	Water Meter Metric (Optional)	1
3	62501793	Fitting, Nylon 3/4 Ght x 3/8 MNPT	2	22	625-002-955	Fitting, Swivel Hex Nut Black 3/4 FPS	2
4	62500443	Nut, Nylon 3/4 Ght	2	23	62500423	Barb-Swivel, 1/2 H	4
5	62500522	Fitting, 1/2 Stem X Barb St	1	24	62502606	Fitting, Tee 1/2 SS	1
6	625-005-993	Fitting, 1/2 Stem x 1/2 Barb 90°	1	25	625-001-672	Fitting, 1/2 NPT x 1/2 H	2
7	625-001-469	Nylon Tie Wrap	1	26*	62500661	Sensor, Water Meter	1
8	39212011	Seal Ring 1/2"	1	27	950-001-117	Hex Head Cap Screw 1/4-20 x 3/4 Gr. #5	2
9	62501392	Solenoid Valve 5 Gpm	1	28	951-002-001	Lock Nut 1/4-20 Flanged Whiz Lock	2
10	625-004-467	Washer, Ght Wht. Rubber	5	29	625-001-963	Clamp, Conduit 1/2	2
11	62500691	Terminal, 1/4 M	3	30	62502716	Fitting, SS RB 1/2 x 1/4	1
12	62501459	Nut Assy W/clamp	1	31	62502596	Valve, Ball 1/2" Brass LF	1
13	950-005-020	S-Tap 10-3/4 Hex Head	4	32	62502593	Press Sw SPDT	1
14	950-002-003	1/4-20 x 3/4 Whiz Bolt	2	33	62502608	Fitting, 1/2 Bulk Head	1
15	392-010-028	S-tap Screw 8-18	2	34	62501169	Fitting, Nipple 1/2 Nylon	2
16	625-900-803	Bracket, Filter	1	35	62501815	Screen 1/2" Nozzle	1
17	62501813	Filter Housing, 1/2 Ports	1	36	62501818	Nozzle W/Screen 1/2"	1
18	62500421	Fitting, Nylon 1/2 Hose x 1/2 MPT 90°	1	37	392-010-019	S-tap Scr #6-20 X 3/8	2
19	62501814	Fitting, Nylon 1/2 Insert	1	38	62500675	Surge Suppressor	1
20	625-900-086	Bracket, Water Meter	2				

* Recommended Spare Parts ** Additional Recommended Spare Parts

FLOW DIAGRAM

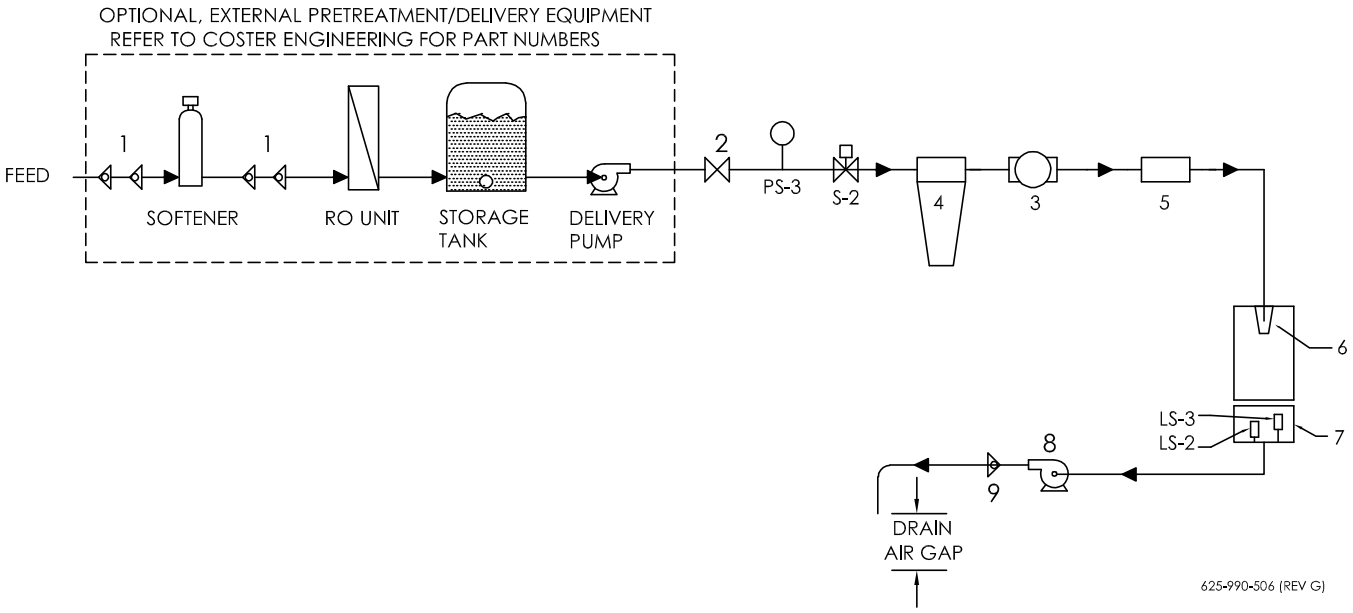

REF. NO.	PART NUMBER	DESCRIPTION	REF. NO.	PART NUMBER	DESCRIPTION
1	62502594	Dual Check Valve	7	62500595	Drain Tank
2	62502596	Feed Shut Off Valve, 1/2 Ball Brass LF	8	62501748	Drain Pump, 1.8 GPM
3	62500658	Water Meter Gallon (Standard)	9	62501963	Check Valve, 3/8 Poly
3	62500790	Water Meter Metric (Optional)	S-2	62501392	Dispenser Valve, Plastic W/Screen, 5 GPM
4	62501813	Filter Housing 10”	PS-3	62502593	Pressure Switch, SPDT
4*	625-001-574	Filter 10”	LS-2	625-001-325	Level Switch, NC
5	62502822	UV Light Assembly, R-CAN (5 GPM)	LS-3	625-001-325	Level Switch, NC
4*	62500854	UV Bulb R-CAN S463RL (5 GPM)			
6	62501818	Nozzle, 1/2” SS W/Screen			
	62501815	Screen, 1/2” Nozzle			

* Recommended Spare Parts ** Additional Recommended Spare Parts

LOG SHEET

LOCATION:

DATE:					
TDS FEED (ppm)					
TDS R/O (ppm)					
TDS DI (ppm)					
SYSTEM PRESSURE					
TANK PRESSURE (Charged)					
WATER METER READING (Gal.)					
D.I. TANK READING (Gal.)					
GALLONS VENDED					
UV INTENSITY					
CHLORINE LEVEL					

MACHINE MAINTENANCE (check ✓ when serviced)

DATE:					
UV LIGHT CHANGED					
PRE-CARBON FILTER					
SEDIMENT FILTER					
D.I. POST CARBON FILTER					
R.O. POST CARBON FILTER					
SALT TANK LEVEL (water softener pretreatment)					
CLEAN DRAIN SCREEN (1800 Series)					
DI TANK READING					
CLEAN & SANITIZE VENDING NOZZLE/DISPENSER HOUSING					
CHECK LEVEL SWITCH (safety float)					
CLEAN DRAIN TANK					
EXTERNAL: CARBON TANK CHANGED (Gal.)					
OPERATOR INITIALS					

NOTES:

COSTER ENGINEERING WARRANTY

The only warranty Coster Engineering gives is as follows:

Coster Engineering warrants each product it manufactures to be in accordance with our published specifications or those specifications agreed to by us in writing at time of sale. Our obligation and liability under this warranty is expressly limited to repairing or replacing, at our option, within one year from the date of shipment, to the original purchaser, any product not meeting the specification. **WE MAKE NO OTHER WARRANTY, EXPRESS OR IMPLIED AND MAKE NO WARRANTY OF MERCHANTABILITY OR OF FITNESS FOR ANY PARTICULAR PURPOSE.** Our obligation under this warranty shall not include any costs or any liability for direct, indirect or consequential damage or delay. If requested by Coster Engineering, products or parts for which a warranty claim is made are to be returned freight prepaid to our factory. Any improper use, operation beyond rated capacity, substitution of parts not approved by Coster Engineering, or any alteration or repair by others in such manner as in our judgment affects the product materially and adversely shall void this warranty. **NO EMPLOYEE OR REPRESENTATIVE IS AUTHORIZED TO CHANGE THIS WARRANTY IN ANY WAY OR GRANT ANY OTHER WARRANTY.**

Coster Engineering reserves the right to make improvement changes, alter features, specifications, options and standard equipment on any of our products without notice and incurrence of obligation on prior manufactured machines.

WARRANTY DOES NOT APPLY to depreciation, parts replacement, maintenance, damage and service necessitated by **NORMAL WEAR**, misuse, lack of proper maintenance, accident, negligence or failure to follow specified operational instructions. Products not covered include, but are not limited to: filters, lamps, reverse osmosis membranes, and deionization resin which normally require perodic replacement or regeneration.

Products not manufactured by Coster Engineering may or may not be covered under warranties supplied by the original manufacture and shall be subject to their warranty limitations.

Repair or replacement of a product does not extend the original warranty.

No reimbursement will be made for labor for repair of any kind without prior authorization from Coster Engineering.

A DELIVERY REPORT FORM must be completed and received by Coster Engineering to initiate the warranty coverage.

COSTER ENGINEERING
217 E Plum Street
MANKATO, MN 56001