COIN MECHANISM

COIN MECHANISM OPERATING FEATURES

NOTE: The coin control board supports 24 volt standard multi-drop bus (MDB) changers with a six (6) pin connector. Contact Coster Engineering for a correct list of MDB peripherals which have been tested and found to work in conjunction with the Coster 4-Select Electronics Package.

CREDIT ACCUMULATION

Credit acceptance will be disabled when the accumulated credit equals or exceeds the highest price item. Bill acceptance is enabled when the coinage currently held in the changers coin tubes is greater than the bill to be accepted and the correct change light is off.

EXACT CHANGE

"Please Use Exact Change" is displayed when Coin Changer tubes fall below a minimum level. Bill acceptance is not allowed when "Please Use Exact Change" is displayed.

SERVICE MODE

Various Features and Options are accessed through the Service Mode of the Vending Machine Controller, (VMC). The Service Mode is comprised of three functional areas or "Menus":

-System Errors Menu
-Main Menu
-Help Menu (accessed through Main Menu)

ENTERING THE SERVICE MODE:

1. Vending machine must be in "Coin Mode" with the power on.

2. Press the round yellow push button on the VMC (See figure 5). An audible "beep" signals the service mode has been accessed. Either the System Errors Menu (If system errors are present) or the Main Menu (if no errors are present) will be displayed.

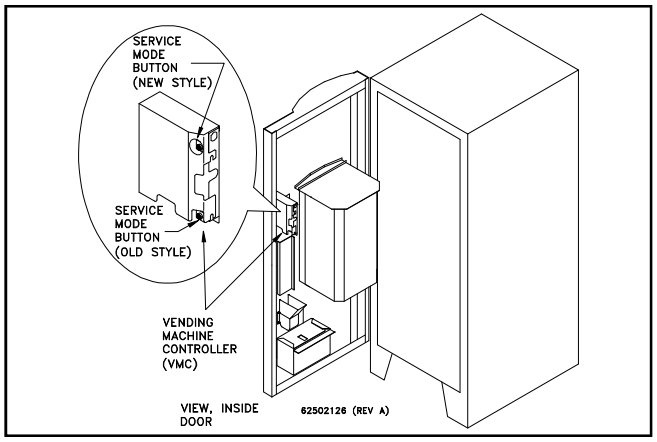

FIGURE 5

SERVICE MODE NAVIGATION

The front push buttons are used to navigate (or scroll) through the service mode.
PB-1 (Selection Push Button #1) = KEY 1 = **"Scroll UP"** in screen menu
PB-2 (Selection Push Button #2) = KEY 2 = **"Scroll DOWN"** in screen menu
PB-3 (Selection Push Button #3) = KEY 3 = **"Execute"** Function
PB-4 (Selection Push Button #4) = KEY 4 = **"Cancel"** / exit service mode

SYSTEM ERRORS MENU:

Displayed only if System Errors are present. **Note:** Displayed errors will list error type, and date and time the error was detected. **Record (write down) all errors before clearing to aid in troubleshooting.** When the error is cleared, this information permanently is deleted.

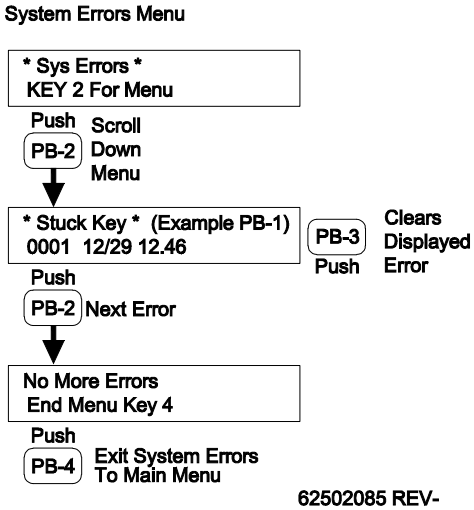

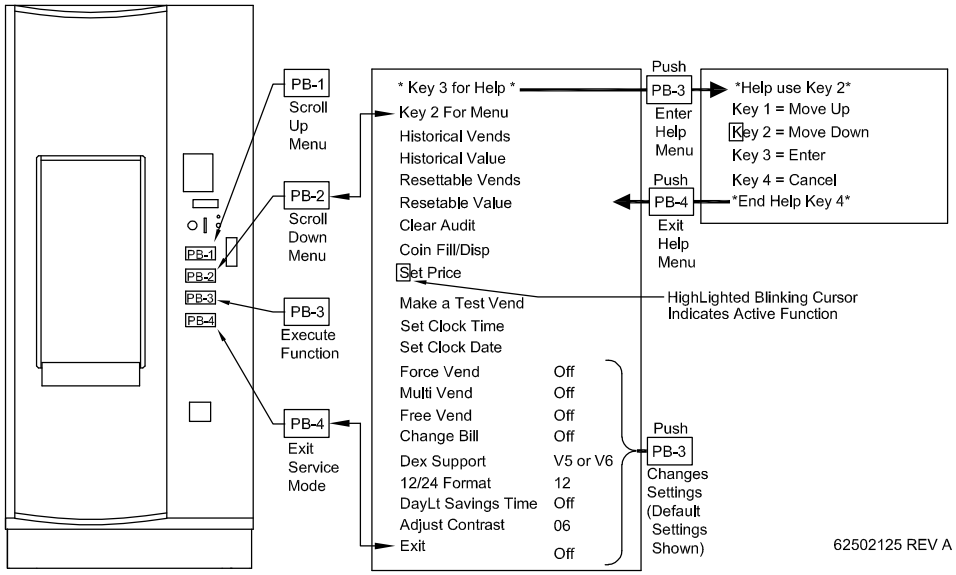

SETTING PRICE

1. Enter Service Mode.
2. Scroll through Menu to “Set Price”. Push “PB-3”
3. Push desired selection button for price change.
4. Change price as follows:

a. PB-1 = Increases Price

b. PB-2 = Decreases Price

c. PB-3 = Saves Price change.

d. PB-4 = Cancels Price change.

MAKE A TEST VEND

1. Enter Service Mode.
2. Scroll through service menu to “MAKE A TEST VEND”. Push “PB-3”
3. Push desired selection button for Test Vend.
4. Unit will;

a. Start Vending if all conditions are OK. VMC automatically returns to Main Menu.

b. Display Sold Out, which indicates a component needs repair.

COIN FILL/DISPENSING

1. Enter Service Mode.
2. Scroll through menu to “Coin Fill/Disp”. Push “PB-3”.
3. Select coin type to be dispensed.

Note: Some Coin Changers feature coin dispense buttons, allowing coin dispensing without entering the service mode.

SET CLOCK TIME/CLOCK DATE

1. Enter Service Mode.
2. Scroll through Menu to “Set Clock Time” or “Set Clock Date” Push “PB-3”.
3. Change as follows:

a. PB-1 = Increases Time/Date parameter

b. PB-2 = Decreases Time/Date parameter.

c. PB-3 = Scrolls to next parameter to change.

d. PB-4 = Cancels Changes, returns to Main Menu.

Adjust Contrast

1. Enter Service Mode.
2. Scroll through menu to “Adjust Contrast”, Push “PB-3”.
3. Adjust Contrast

a. PB-1 = Increase Contrast (Lighter Display).

b. PB-2 = Decrease Contrast (Darker Display).

c. PB-3 = Save Contrast Setting.

Important: Do not save (Push PB-3) when the display is either to dark or to light to read. To adjust or recover from a unreadable contrast display setting:

1. Enter The Service Mode (1 Audible Beep).
2. Press PB-2 Eighteen Times (18 Audible Beeps).
3. Press PB-3 One Time (1 Audible Beep).
4. Press PB-1 To Increase Contrast (Lighter Display) or PB-2 to Decrease Contrast (Darker Display) as required.

Note:

1. The VMC has a battery backup and retains the correct time when power is removed. If correct time is not retained, replace battery.

2. **Important:** Correct time setting is required for accurate DEX function reports.

ACCOUNTABILITY

1. Enter Service Mode.

2. Scroll through Menu to desired accounting parameter. “Push PB-3”

a. Historical Vends: Total Number of paid vends.

b. Historical Value: Total Value of paid vends.

c. Resettable Vends: Number of paid vends since “Clear Audit” was last used

d. Resettable Value: Value of paid vends since “Clear Audit” was last used.

e. Clear Audit: Clears Resettable Vends and Resettable Value simultaneously.

3. VCM will;

a. Display Vend or Value Count, or

b. Clear Resettable Vends and Resettable Value.

VEND OPTIONS

FORCE VEND OPTION

Default Setting: Off

When “Off”, (disabled) this option allows the customer to return coins using the coin return button without first attempting a vend selection.

Note: When the “force vend” option is “Off”, (disabled) it will allow your machine to be used as a bill changer (i.e. customer inserts bills into acceptor, presses the “coin return button”, and gets coins in return with out making a selection.) This may cause your coin tubes to be prematurely depleted.

When “Force Vend” is “On” (enabled) the customer must attempt a selection before coins will be returned. Force vend does not apply to credit from card reader.

MULTI-VEND OPTION

Default Setting: Off

Prevents automatic credit return following a successful vend. Remaining credit is shown on the display, and the customer can add credit, make a selection, or return credit using Coin Return button.

Free Vend Option Default Setting: “Off” When “Free Vend” is “On”, (enabled) all selection buttons will vend without the customer establishing credit. “Free Make Selection” will be displayed and all credit acceptance will be disabled.

Note: Setting an individual selection button price to “0” (Zero), will enable that selection button to vend without establishing credit (Free).

CHANGE BILL OPTION

Default Setting: Off

When “Change Bill” is “On”, Bill credit will be returned as coins.

Note: This allows the unit to be used as a Bill Changer, which may deplete coin tube inventory below minimum levels, causing “Please Use Exact Change” to be displayed

DEX SUPPORT OPTION

Default Setting: V5 Or V6

This option not used at this time, and has no effect on VMC operation.

12/24 FORMAT

Default Setting: 12

This option changes the Clock Setting between 12 and 24 hour formats.

DAYLIGHT SAVINGS TIME

Default Setting: Off

When “Daylight Savings Time” is “On”, automatic USA Daylight Savings Time correction is enabled.

This setting has no effect on VMC operation.

Vending Machine Controller Error Codes

ERROR NAME	ORIGIN	RESOLUTION
BV Check Sum	Bill Validator: internal problem has occurred in the firmware.	Repair or replace bill validator.
BV Communication	Bill Validator, VMC, or cabling: communications between VMC and validator stopped unexpectedly.	Ensure cabling between VMC and validator is secure, with no broken wires. In unusual cases, bill validator or VMC may need to be replaced.
BV Jammed Bill	Bill Validator: a bill has jammed in the acceptance path.	Remove the jammed bill.
BV Motor	Bill Validator: one of the motors has failed.	Repair or replace bill validator.
BV Open Box	Bill Validator: cash box was removed while the machine door was closed.	Ensure that the cash box is firmly seated on the validator. Check that the main door switch is connected properly to the VMC. Ensure that the machine door switch is not stuck closed.
BV Sensor	Bill Validator: one of the sensors has failed.	Repair or replace bill validator.
BV Stalker Full	Bill Validator: cash box is full.	Empty the cash box.
CC Check Sum	Coin Mech: internal problem has occurred in the firmware.	Repair or replace coin mech.
CC Communication	Coin Mech, VMC, or cabling: communications between VMC and coin mech stopped unexpectedly.	Ensure cabling between VMC and coin mech is secure, with no broken wires. In unusual cases, coin mech or VMC may need to be replaced.
CC Jammed Tube	Coin Mech: a payout tube has jammed.	Check for coin jams. On mechs with removable cassettes, ensure that the cassette is seated properly.
CC Sensor	Coin Mech: one of the payout tube sensors is behaving abnormally.	Repair or replace coin mech.
CC Unplugged	Coin Mech: the acceptor module seems to be missing.	Repair or replace coin mech.
CR Card Error	Card Reader: the payment media is defective.	This is an informational message; the problem may be limited to one particular card.
CR Communication	Card Reader, VMC, or cabling: communications between VMC and card reader stopped unexpectedly.	Ensure cabling between VMC and card reader is secure, with no broken wires. In unusual cases, card reader or VMC may need to be replaced.
CR Invalid Card	Card Reader: payment media problem.	This is an informational message; the problem may be limited to one particular card.
CR Jammed Card	Card Reader: payment media has jammed inside the reader.	Clear the jam.
CR Service Soon	Card Reader: reader device requires maintenance.	Perform maintenance as recommended by reader's manufacturer.
CR Tamper	Card Reader: a security breach has been detected.	This is an informational message.
Motor Error (s)	VMC: A selection button problem, detected, disabling button. Defective or miss-adjusted input pressure switch PLC inside electrical box maybe defective.	Correct fault and "make a test vend" to reset VMC motor error.
Stuck Key	VMC: A selection button or keypad key has been depressed for an abnormally long time.	Repair or replace selection button or machine keypad.